# MTX-1

RC 2WD MONSTER TRUCK

MONSTER TRUCK

**RTR**

MST

max SPEED TECHNOLOGY

MONSTER TRUCK

MST OWNERS CLUB ADVENTURES OFF-ROAD MST




CREEK MUD FOREST ROCKY SNOW SAND

## EXPLODED MANUAL

※ Please make the object as the standard.

### SPECIFICATION

- LENGTH: 463mm
- WIDTH: 294mm
- HEIGHT: 257mm
- WHEELBASE: 280mm
- GROUND CLEARANCE: 66mm
- TIRES: 130mm × 78mm

**WWW.RC-MST.COM**

※SPECIFICATION ARE SUBJECT TO CHANGE WITHOUT NOTICE

# MTX-1
RC 2WD MONSTER TRUCK

Appreciate for your choice of **MTX-1**! You will be impressed with its performance and beauty.
Please prepare additional parts as car battery, transmitter battery, and charger.
Please read the manuals for the electronics setting and operations.
If you have doubt or need assistance, please contact the purchased shop or hobby shop for help, many thanks!
首先感謝你購入 **MTX-1** 這項產品，您將擁有一部兼具性能與美型的怪獸卡車。
在首次操作前，有以下幾項須要另行購置的物件；車用電池、遙控器用電池、充電器。
備妥上述物件後，並詳閱各說明書。
如需其他協助，請向原購買店家，或遙控模型店詢問！謝謝！

PLEASE FOLLOW BELOW
OPERATIONS BEFORE OPERATION.　　請於使用前, 執行以下操作

1. Install transmitter batteries.
2. Connector ESC and battery.
3. Switch on the transmitter.
4. Trims the transmitter in neutral.
5. Switch on the ESC.
6. Completed.

1. 安裝遙控器電池
2. 聯結車用電池與電子變速器
3. 打開遙控器電源
4. 調整遙控器各微調器至中立點
5. 打開電子變速器電源
6. 完成

※ Please play this product in opening or safety area.
請於空曠或安全無虞的場所，使用本項產品。

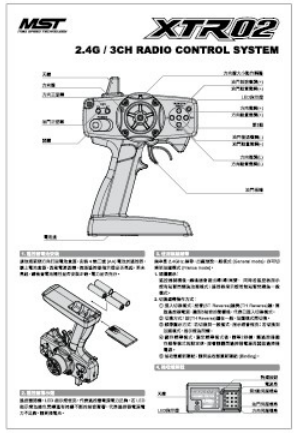


※ Please refer to instruction of transmitter & receiver performance.
遙控器&接收機功能說明請參閱詳細說明書。




※ Please refer to instruction of ESC performance.
電子變速器功能說明請參閱詳細說明書。

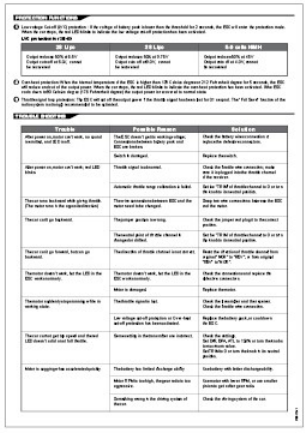

## FACTORY ELECTRONIC SETTING
原廠電裝配線圖

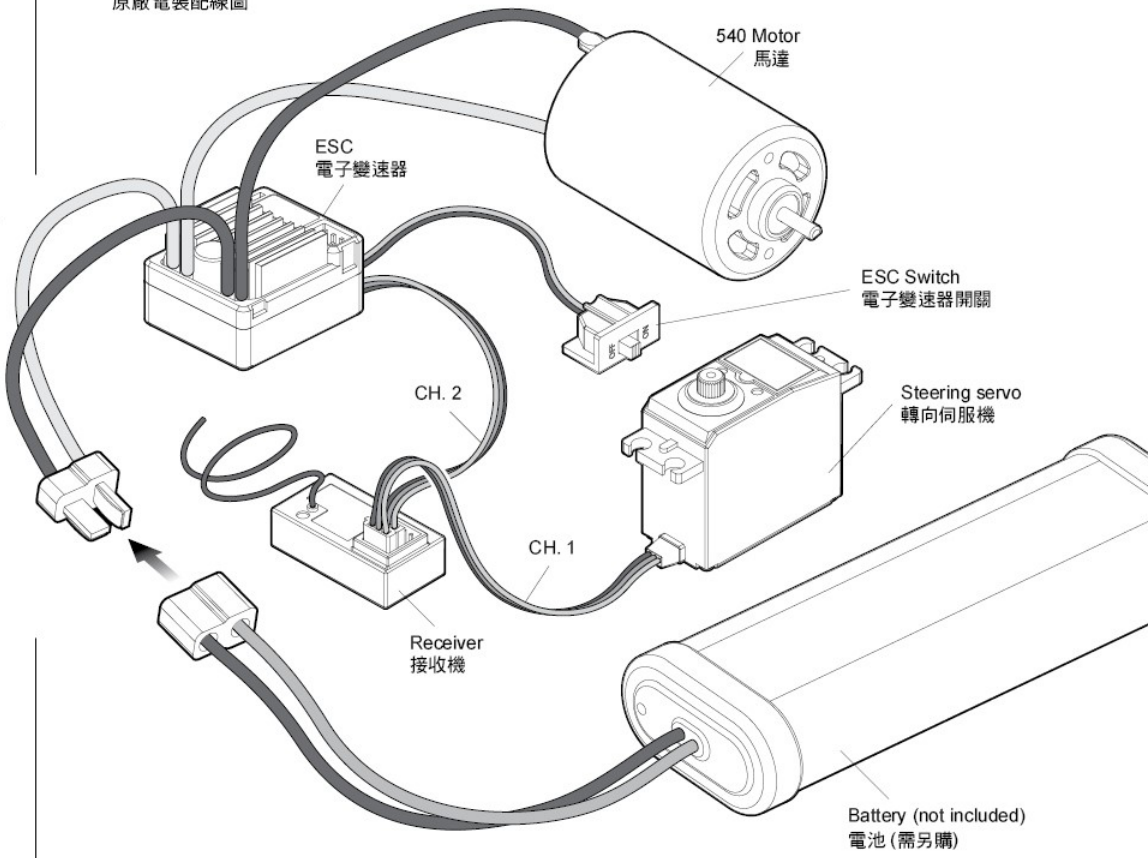


| GEAR RATIO | | |
|---|---|---|
| Motor type | Pinion Gear | FDR |
| Brushed motor | 32T | 18.00 |
| Brushless motor | 24T | 24.00 |

# 1 ATTACHING TIRE
安裝輪胎

**STEP 1** Attaching tire
安裝輪胎

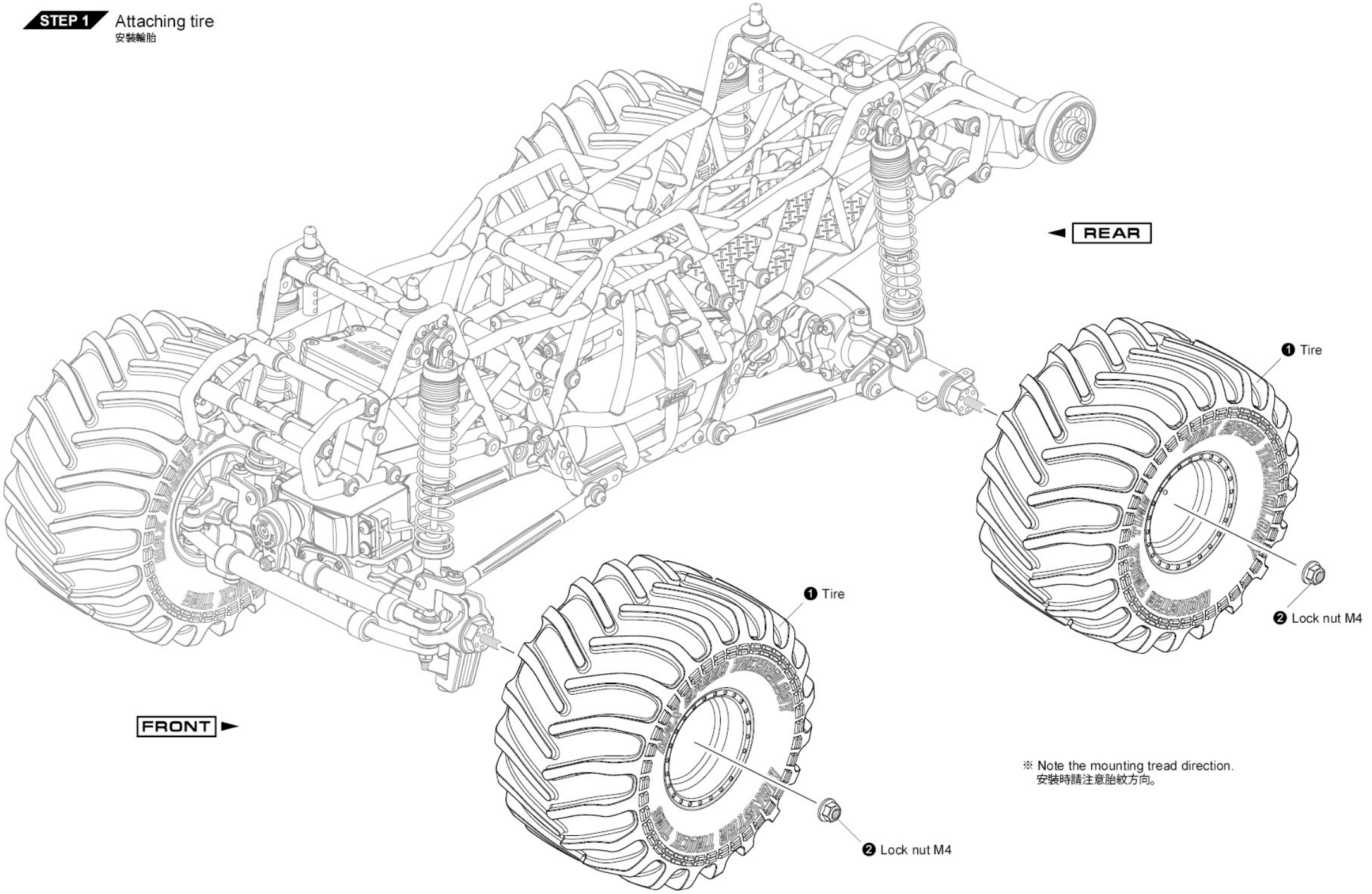


※ Note the mounting tread direction.
安裝時請注意胎紋方向。

# 2 ATTACHING BATTERY
安裝電池

**STEP 1** Unlock the knob
解鎖旋鈕

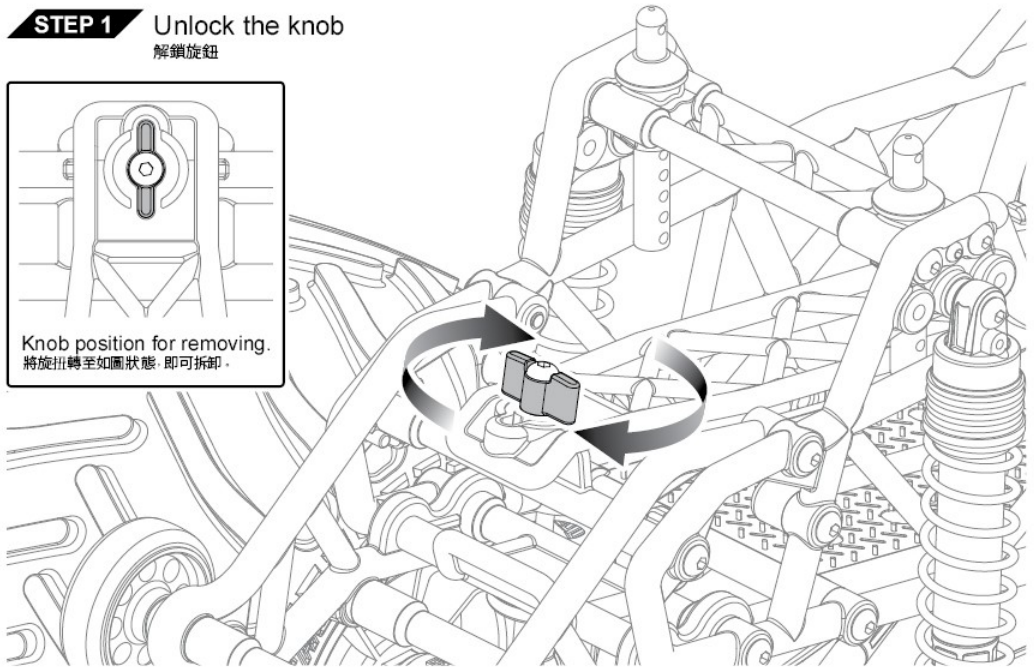


**STEP 3** Fixed knob
固定旋鈕

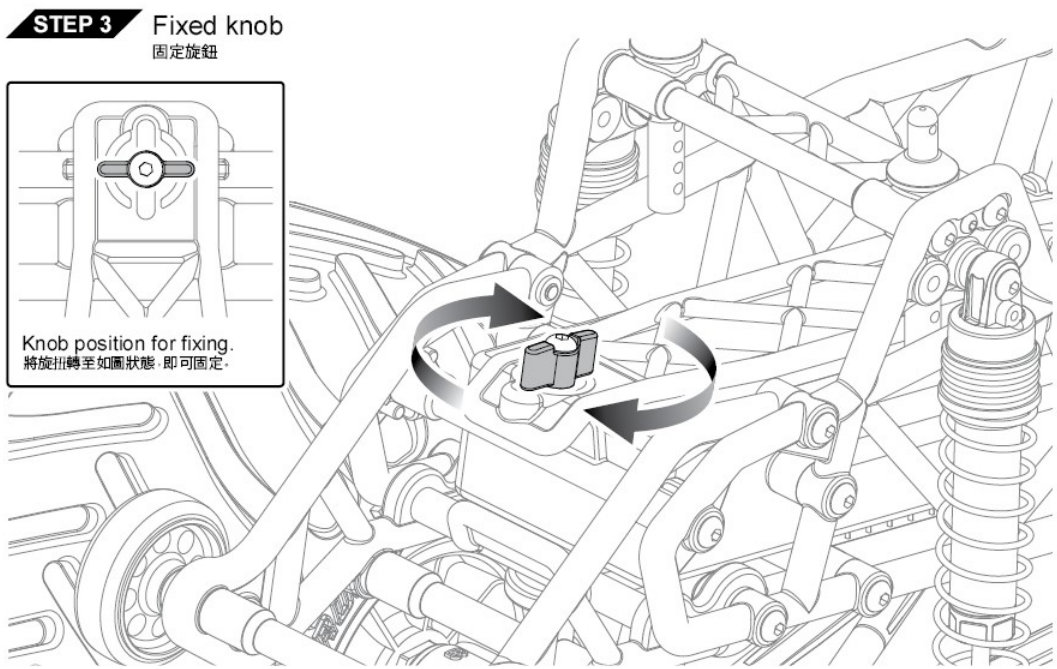


**STEP 2** Attaching Battery
電池安裝

※ Recommended battery measurement
L140×W48×H27.5mm.
建議安裝長140×寬48×高27.5mm 尺寸以內的電池。

※ The assembly and conservation method may be different by specification of battery.
電池的安裝方式會因為廠牌規格而有些微差異，電池的使用方式與保存方式，也會因電池的種類而有所不同。

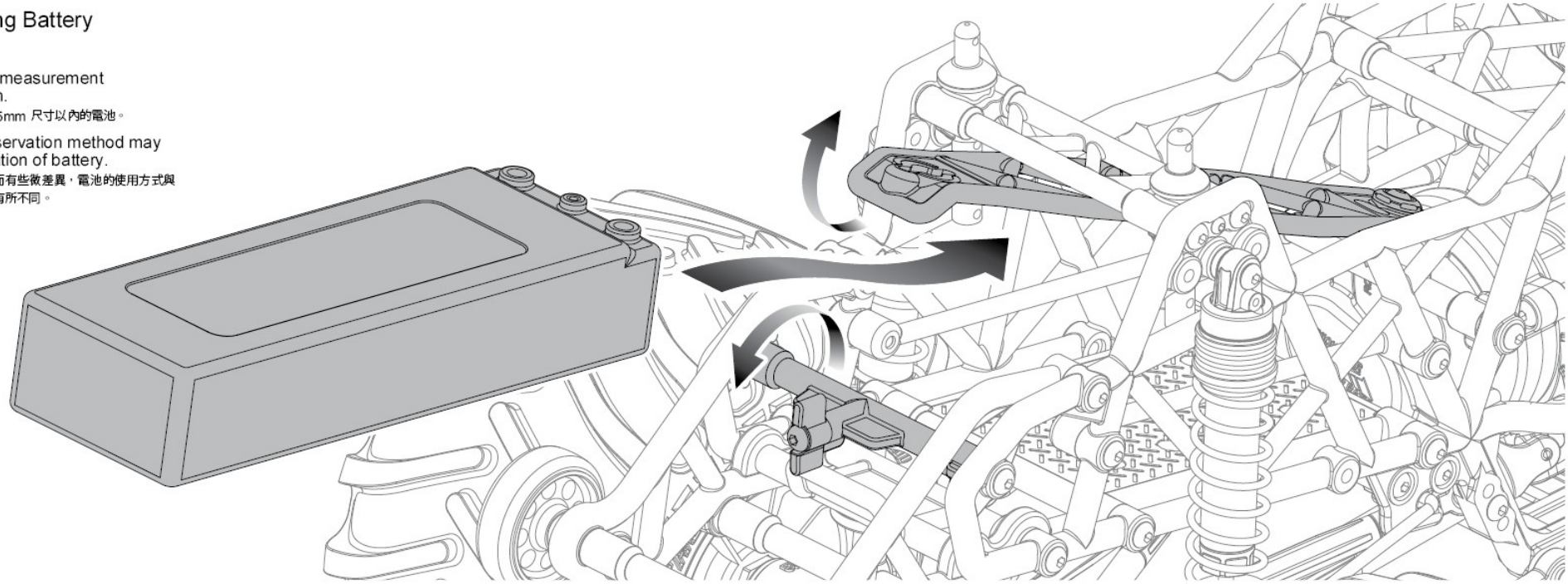

230086 **Extra purchase**

# ATTACHING DAMPER
安裝避震器

※The standard is 4pcs/car.

## PARTS BAG TOOL



3×6×7 Spacer ×4
墊片



M3×14 screw ×4
圓頭螺絲



M3×30 screw ×4
圓頭螺絲

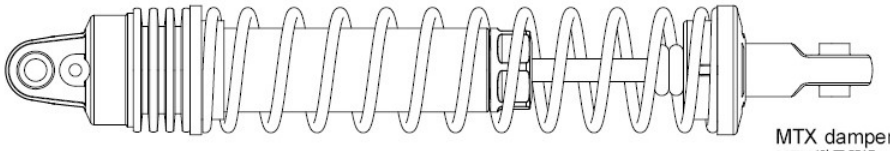

MTX damper set ×2
MTX 避震器組
230086

---

**STEP 1** Attaching front damper
安裝前避震器

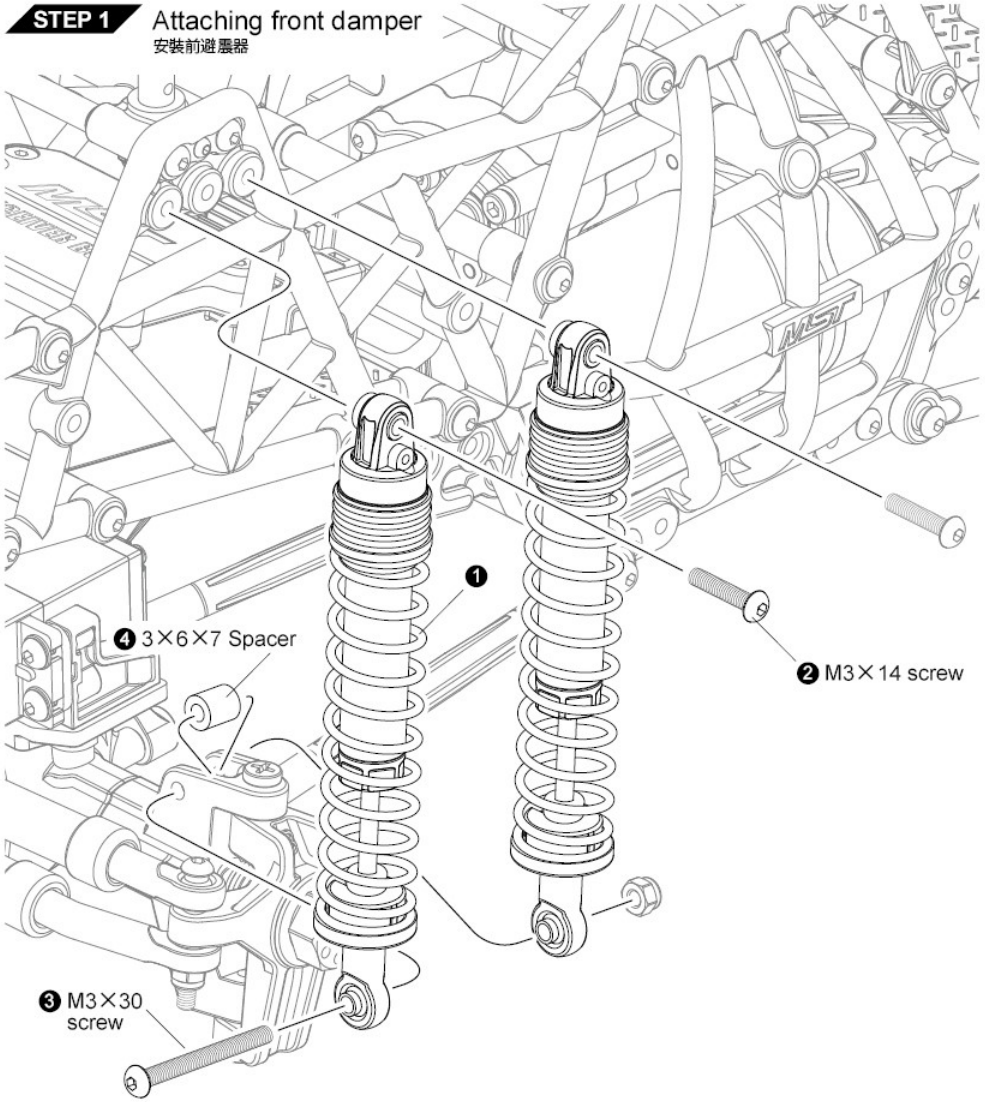


**STEP 2** Attaching rear damper
安裝後避震器

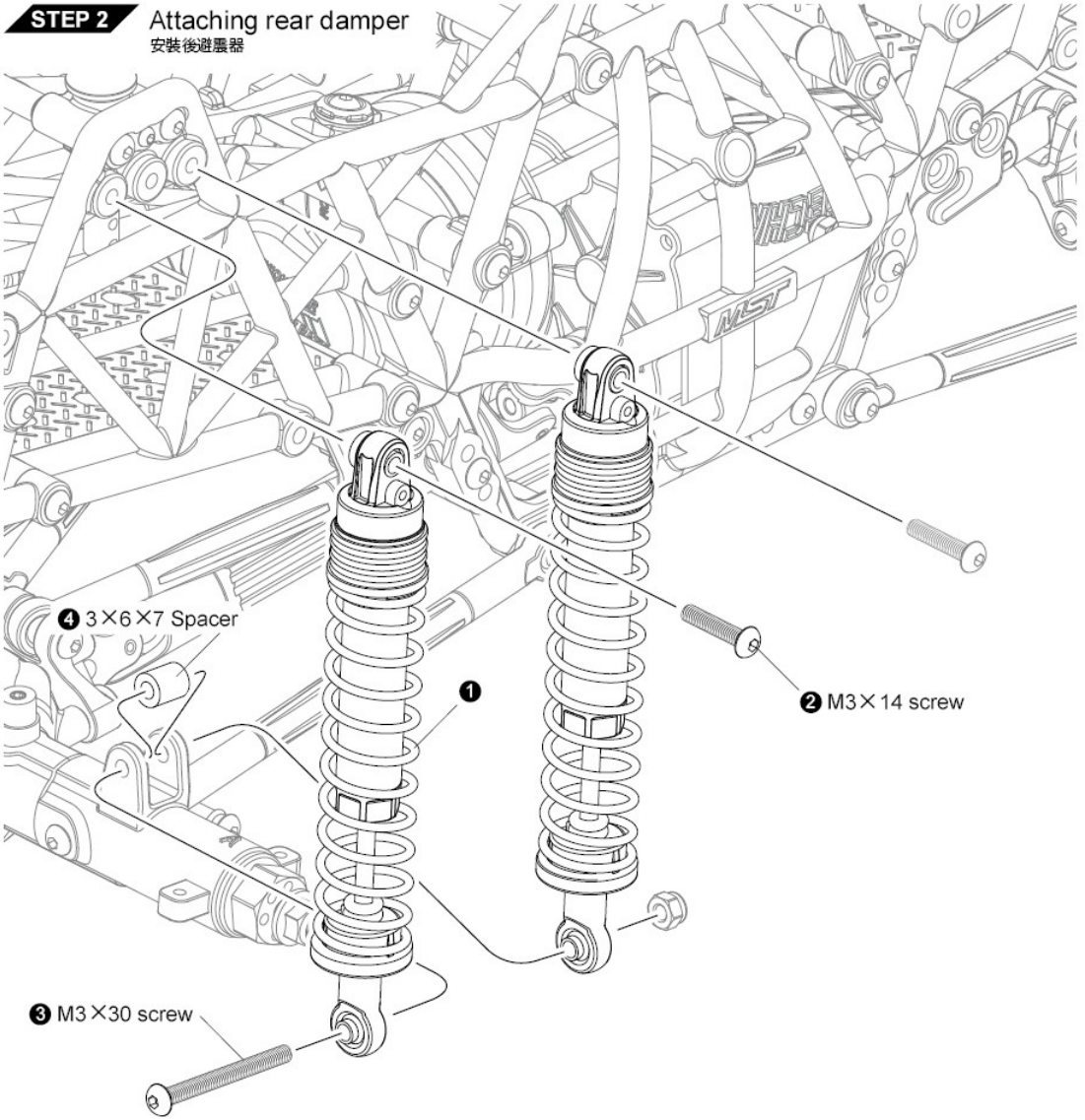

# MTX-1
RC 2WD MONSTER TRUCK

## EXPLODED VIEW

MST max speed technology

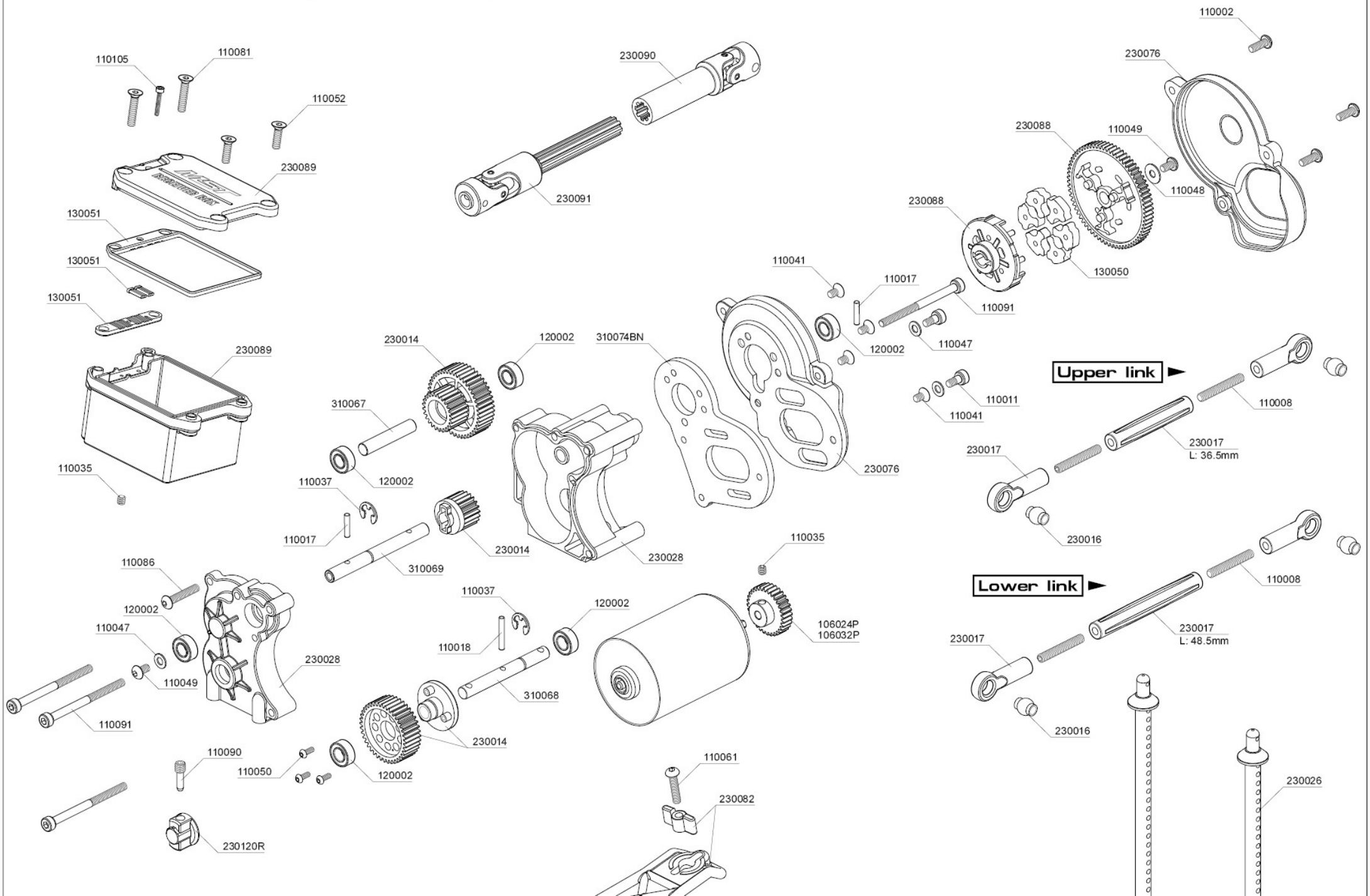

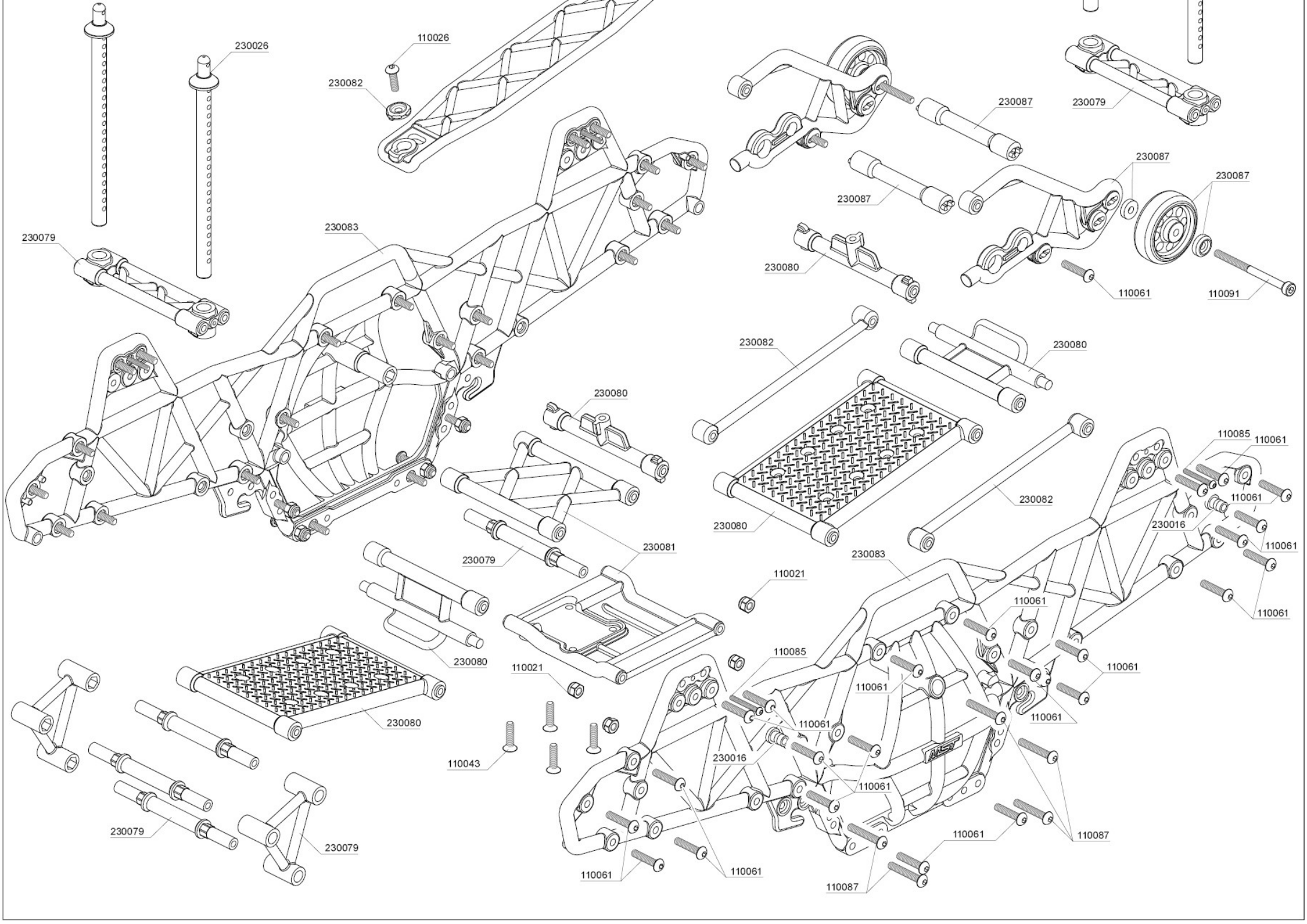
230026
110026
230082
230087
230079
230087
230087
230087
230079
230083
230080
110061
110091
230082
230080
230080
110085
110061
230082
110061
230080
230016
230081
110061
230079
230083
110021
110061
110061
230080
110085
110021
110061
110061
230080
110061
110043
230016
110061
230079
230079
110061
110087
110061
110061
110087

# MTX-1
RC 2WD MONSTER TRUCK

## EXPLODED VIEW

MST max speed technology

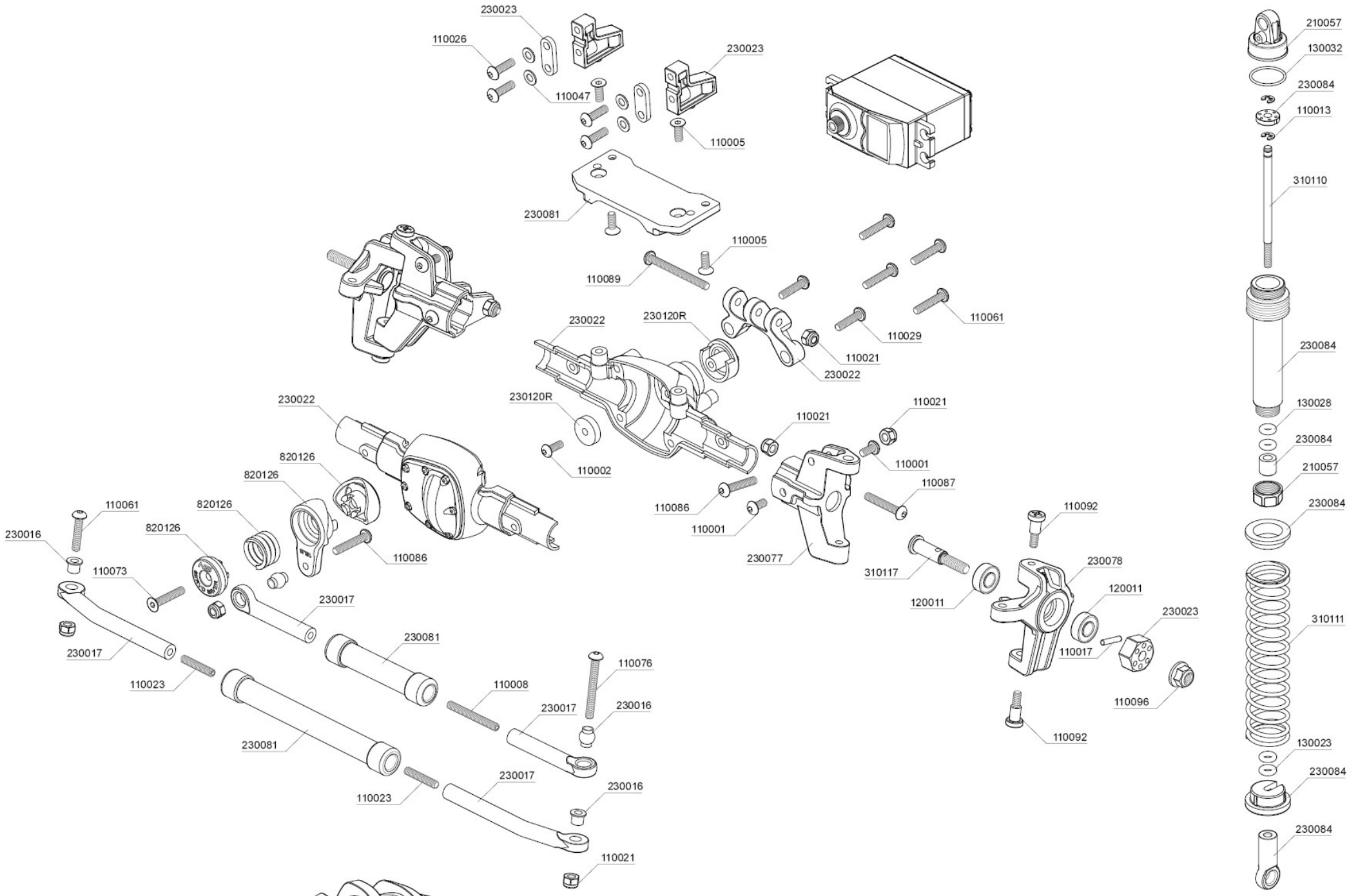

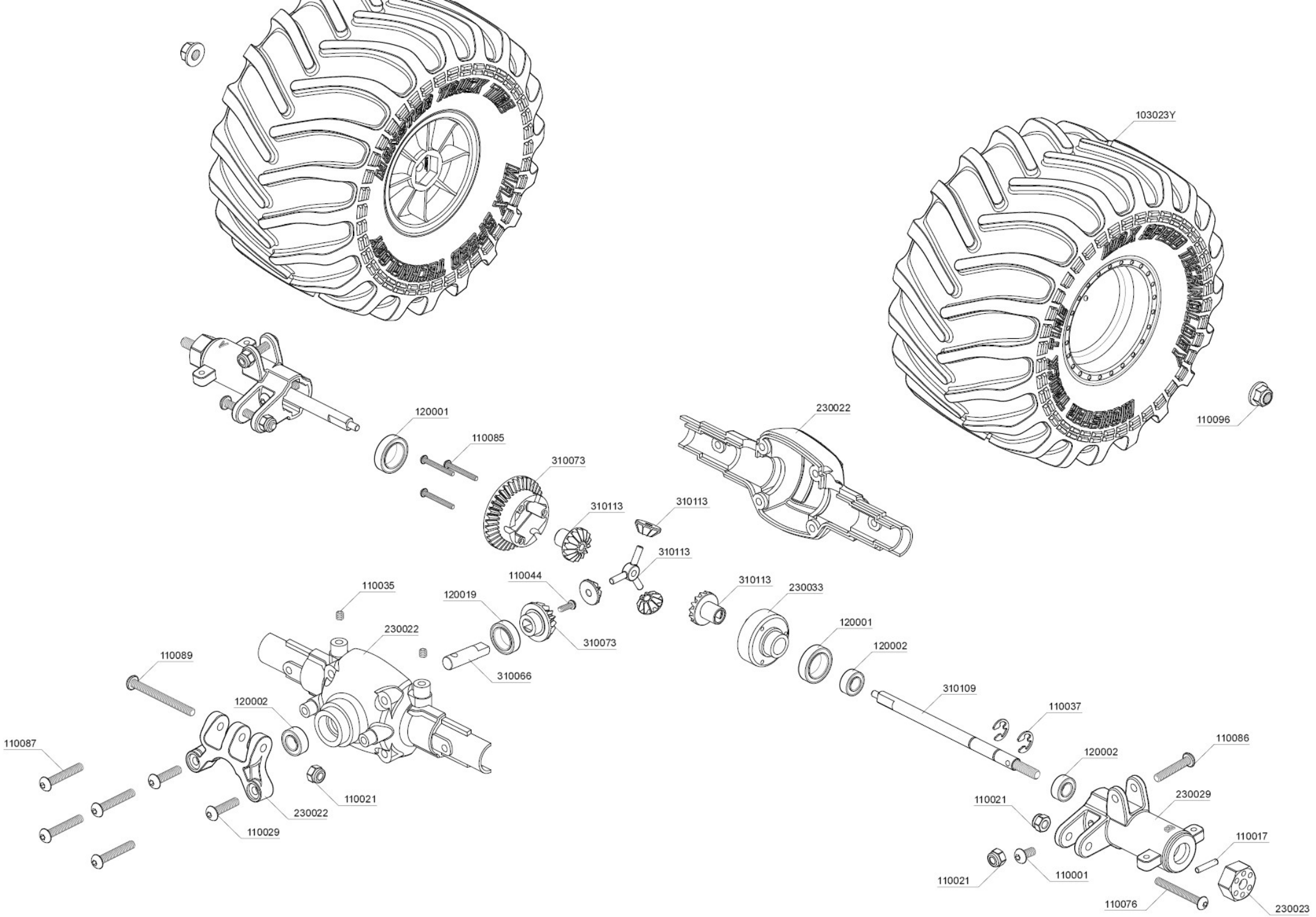
103023Y
110096
120001
110085
310073
310113
310113
310113
230022
110035
120019
110044
310073
310113
230033
120001
120002
230022
110089
310066
310109
110037
120002
110086
120002
110087
110021
230029
110021
110017
110001
110021
110076
230023
110029
230022

M2×5 screw ×3
圓頭螺絲
110050

M2×6 screw ×1
圓頭螺絲
110044

M2×10 screw ×2
圓頭螺絲
110084

M2×16 screw ×7
圓頭螺絲
110085

M3×5 screw ×2
圓頭螺絲
110049

M3×6 screw ×8
圓頭螺絲
110001

M3×8 screw ×4
圓頭螺絲
110002

M3×10 screw ×5
圓頭螺絲
110026

M3×12 screw ×4
圓頭螺絲
110029

M3×14 screw ×60
圓頭螺絲
110061

M3×16 screw ×6
圓頭螺絲
110086

M3×18 screw ×16
圓頭螺絲
110087

M3×25 screw ×3
圓頭螺絲
110076

M3×30 screw ×6
圓頭螺絲
110089

M2.5×16 screw ×1
沉頭螺絲

M3×5 screw ×4
沉頭螺絲
110041

M3×8 screw ×4
沉頭螺絲
110005

M3×10 screw ×2
沉頭螺絲
110052

M3×12 screw ×4
沉頭螺絲
110043

M3×14 screw ×2
沉頭螺絲
110081

M3×3 screw ×4
止付螺絲
110035

M3×16 screw ×2
止付螺絲
110023

M3×25 screw ×17
止付螺絲
110008

M1.6×10 cap screw ×1
有頭螺絲
110105

Shaft screw ×3
銷釘螺絲
110090

King pin screw ×4
大王螺絲
110092

M3×6 Cap screw ×2
有頭螺絲
110011

M3×40 Cap screw ×6
有頭螺絲
110091

R-clip ×10
R形扣
110016

2×9.8 Shaft ×6
插銷
110017

2×13.8 Shaft ×1
插銷
110018

2WD axle ×2
二驅輪軸
310117

Bevel gear shaft ×1
傘齒軸
310066

5×26.8 Shaft ×1
5×26.8 齒軸
310067

Gear shaft ×1
輸出軸
310068

Main gear shaft ×1
主齒軸
310069

Rear axle ×2
後輪軸
310109

3×6×0.5 spacer ×7
墊片
110047

3×8×0.5 spacer ×1
墊片
110048

5×10×4 Ball bearing ×11
培林
120002

5×11×4 Ball bearing ×4
培林
120011

8×12×3.5 Ball bearing ×1
培林
120019

10×15×4 Ball bearing ×2
培林
120001

Lock nut M3 ×21
防鬆螺帽
110021

Lock nut M4 ×4
防鬆螺帽
110096

E-clip 4.0 ×6
E扣
110037

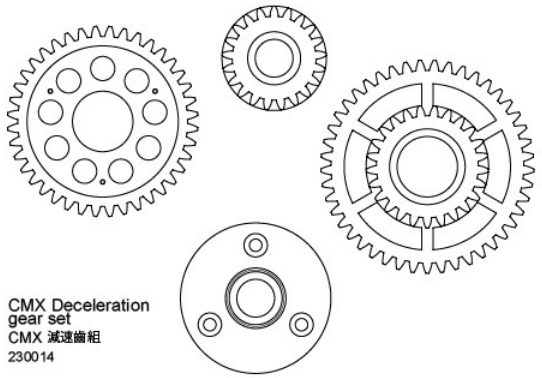

CMX Deceleration gear set
CMX 減速齒組
230014

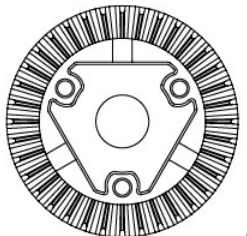

Bevel gear set 36-15 ×1
傘齒組 36-15
310073

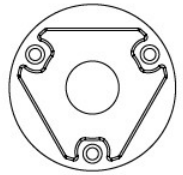

CMX Heavy duty locker set ×1
直軸連接座組
230033

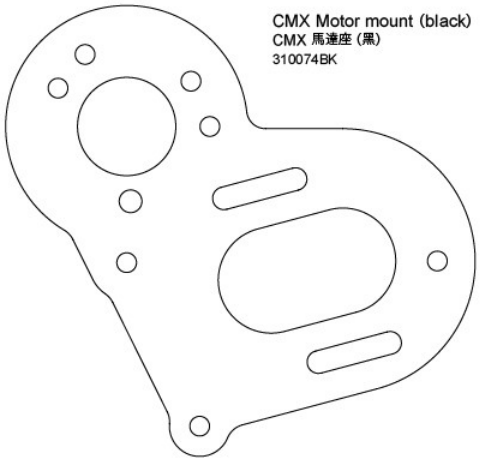

CMX Motor mount (black)
CMX 馬達座 (黑)
310074BK

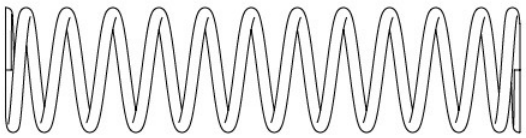

Coil spring 72mm ×4
避震彈簧 72mm
310111



Damper cylinder ×4
避震筒身
230084



Piston rod ×4
避震軸心
310110

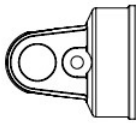

Cylinder cap ×4
避震器上蓋
210057



Rod guide cap ×4
避震器下蓋
210057



Rod guide ×4
避震器下蓋墊片
230084



E-clip ×8
E扣
110013



Piston ×4
活塞
230084



Damper O-ring P3 (blue) ×8
避震器O環 (藍)
130028



O-ring P3 (black) ×8
O環 (黑)
130023

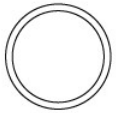

10.8×0.9 O-ring ×4
O環
130032

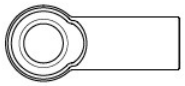

Damper adjuster ×4
避震器拉桿
230084



Damper retainer ×4
避震器彈簧座
230084

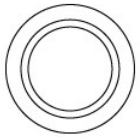

Spring holder ×4
彈簧托環
230084



Spring spacer ×4
彈簧調整扣 1mm
230084

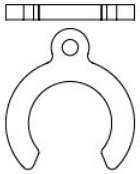

Spring spacer ×4
彈簧調整扣 2mm
230084

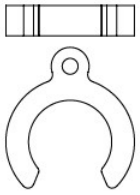

Spring spacer ×4
彈簧調整扣 4mm
230084

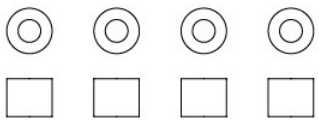

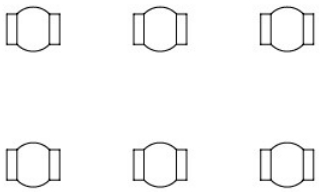

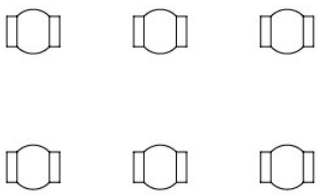

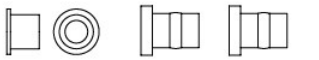



CMX Ball connector set ×2
CMX 球頭組
230016

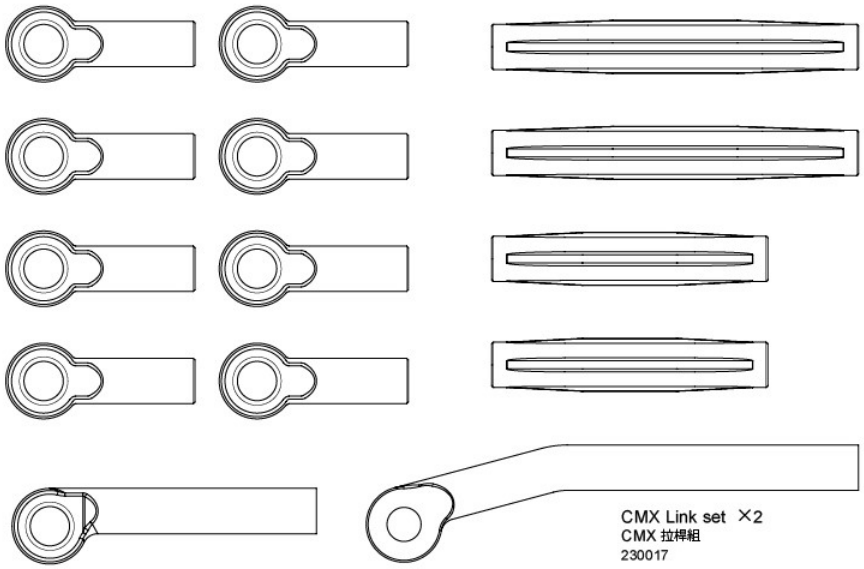

CMX Link set ×2
CMX 拉桿組
230017

Cush drive rubber gear M06-70T
緩衝齒座組 M06-70T
230088

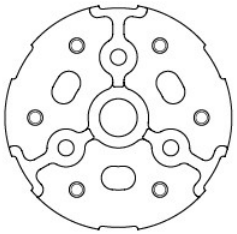




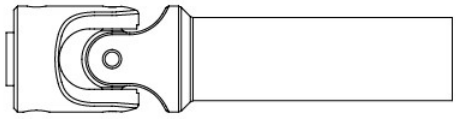

CMX Driveshaft
CMX 傳動軸
230090

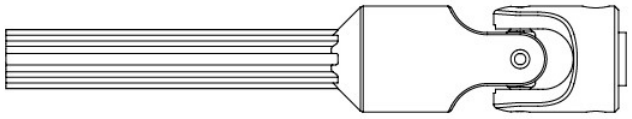

CMX Wheelbase 267mm accessories
CMX軸距267mm配件
230091

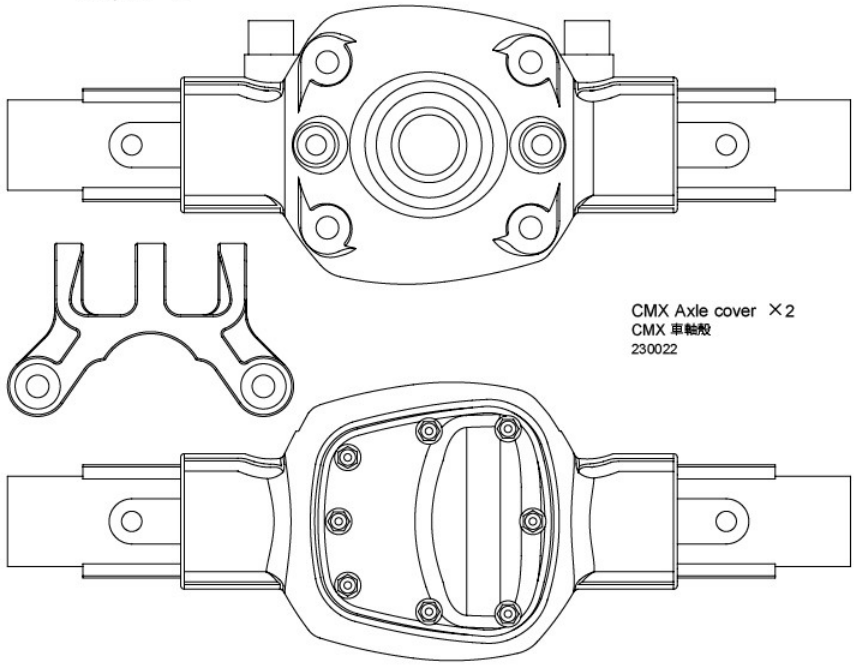

CMX Axle cover ×2
CMX 車軸殼
230022

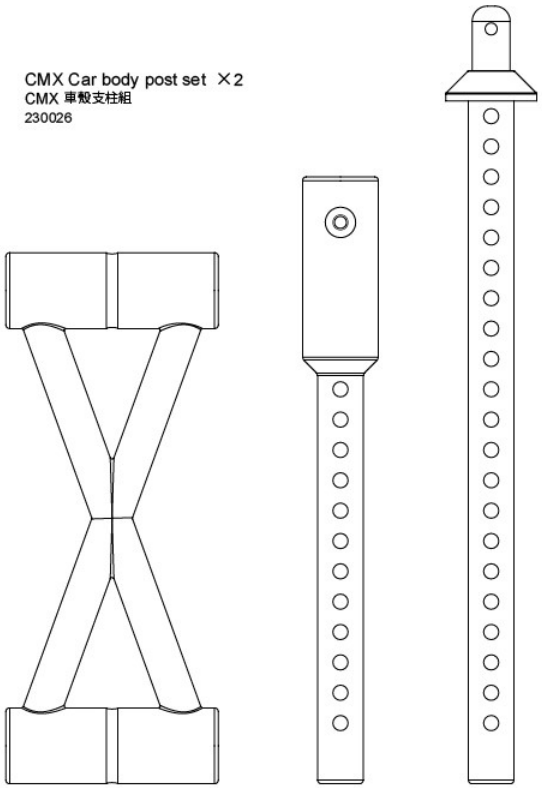

CMX Car body post set ×2
CMX 車殼支柱組
230026

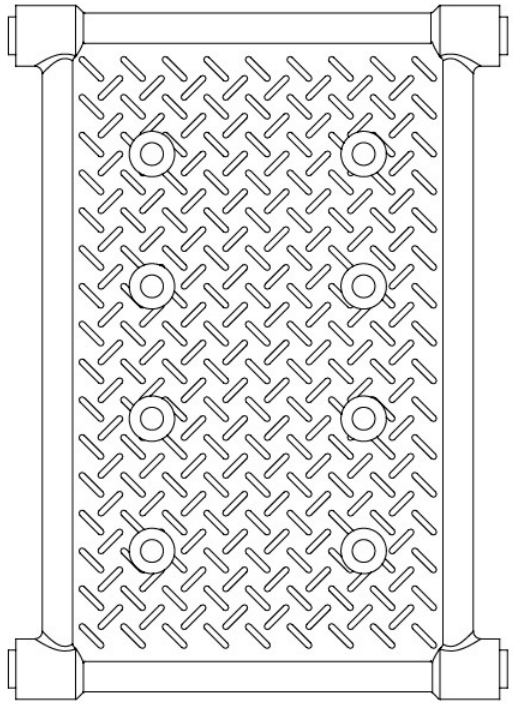

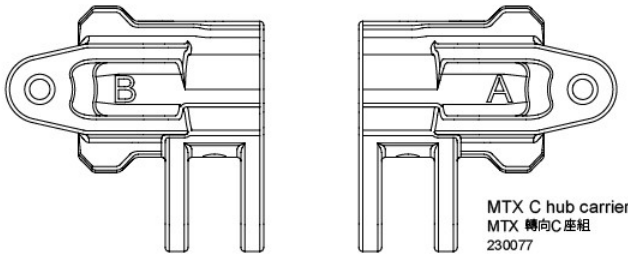


MTX C hub carrier set
MTX 轉向C座組
230077

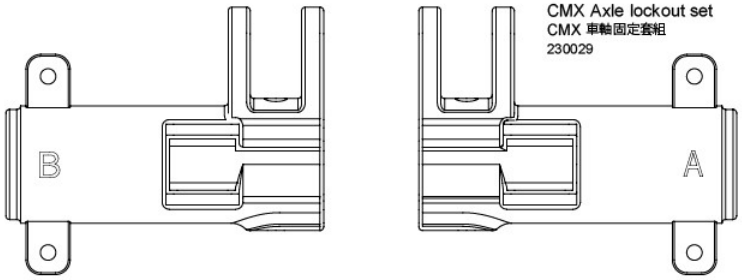


CMX Axle lockout set
CMX 車軸固定套組
230029

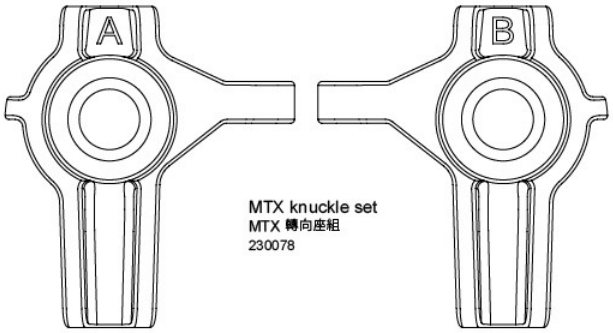


MTX knuckle set
MTX 轉向座組
230078

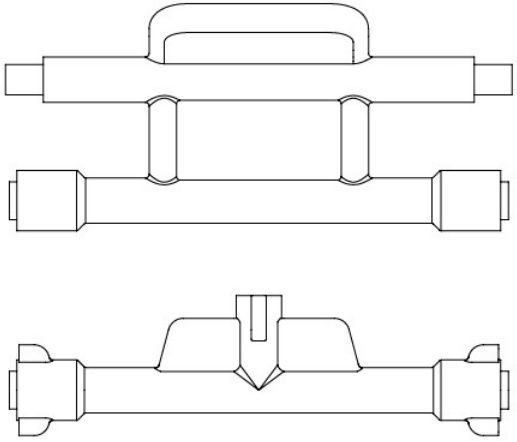

MTX Electronics tray ×2
MTX 電裝座組
230080

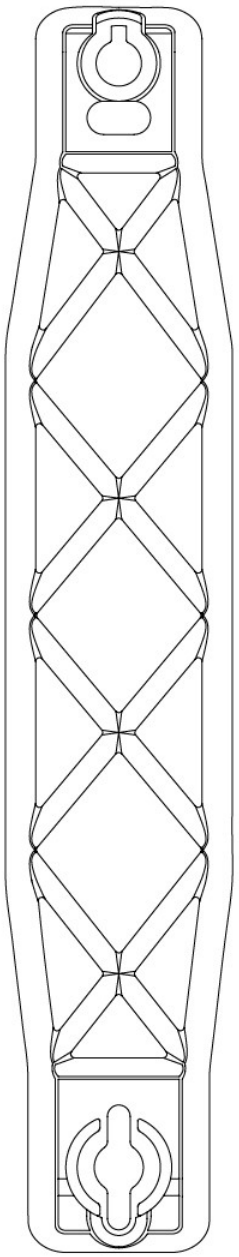



MTX Battery strap
MTX 電池壓板組
230082

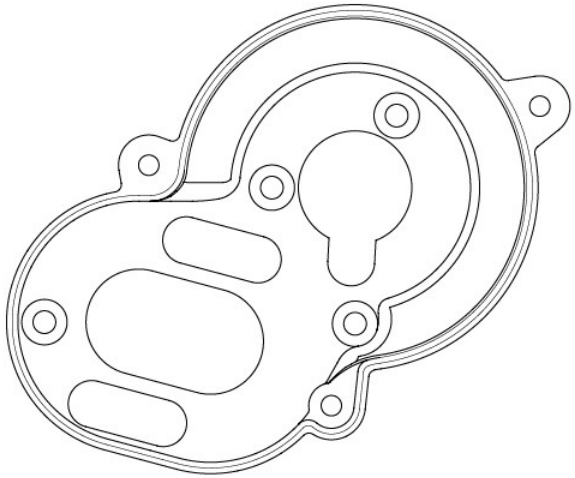

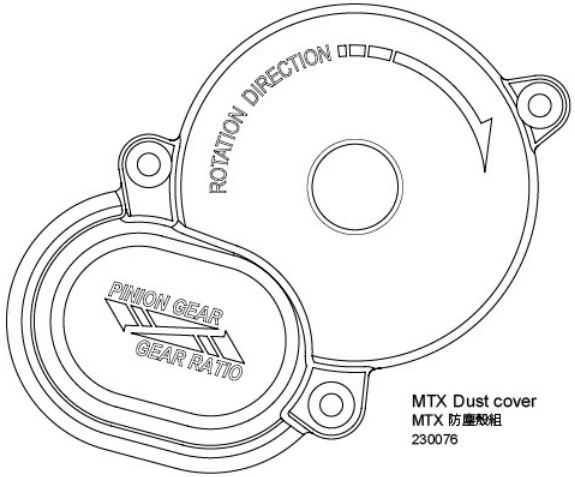


MTX Dust cover
MTX 防塵殼組
230076

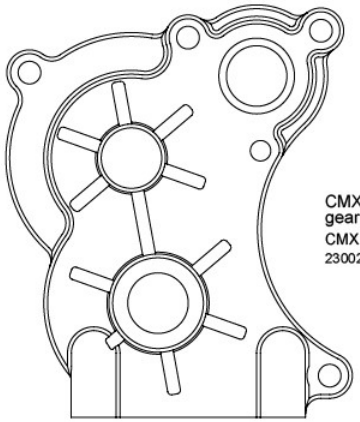

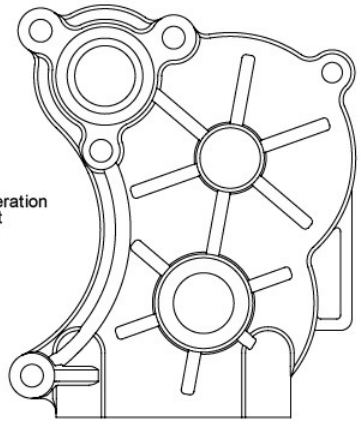

CMX Deceleration gear box set
CMX 減速箱組
230028






Receiver case set
接收機盒組
230089

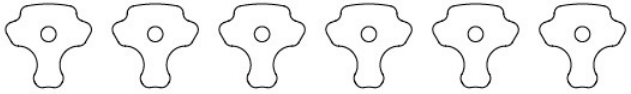

Cush drive rubber blocks (6)
緩衝膠圈 (6)
130050

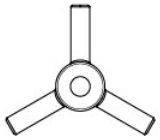

Diff. gear set ×1
傘差齒輪組
310113

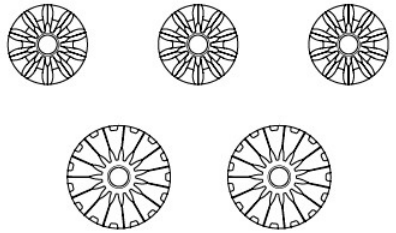

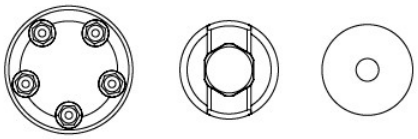

MSA Axle bearing cap set
MSA 車機軸承蓋組
230120R

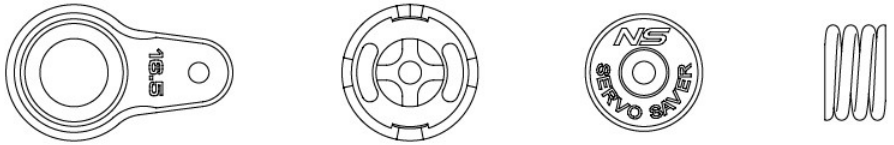


NS High-torque servo saver
NS 高扭力伺服緩衝器
820126



Receiver case seals
防水膠圈組
130051

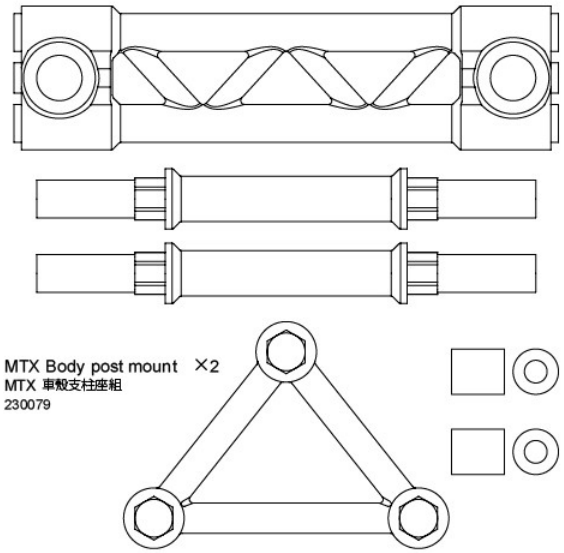

MTX Body post mount ×2
MTX 車殼支柱座組
230079

Monster truck wheels w/ monster truck tire (yellow)
大腳胎框組 (黃)
103023Y

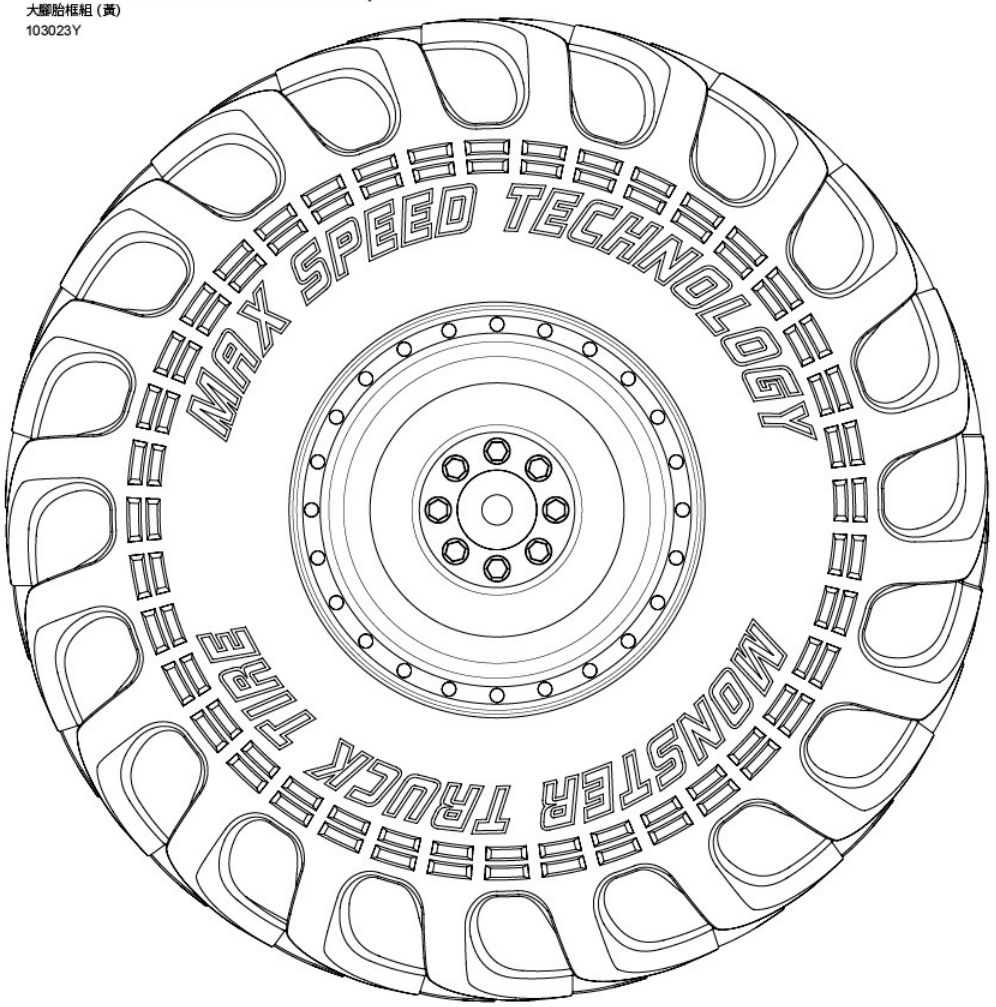


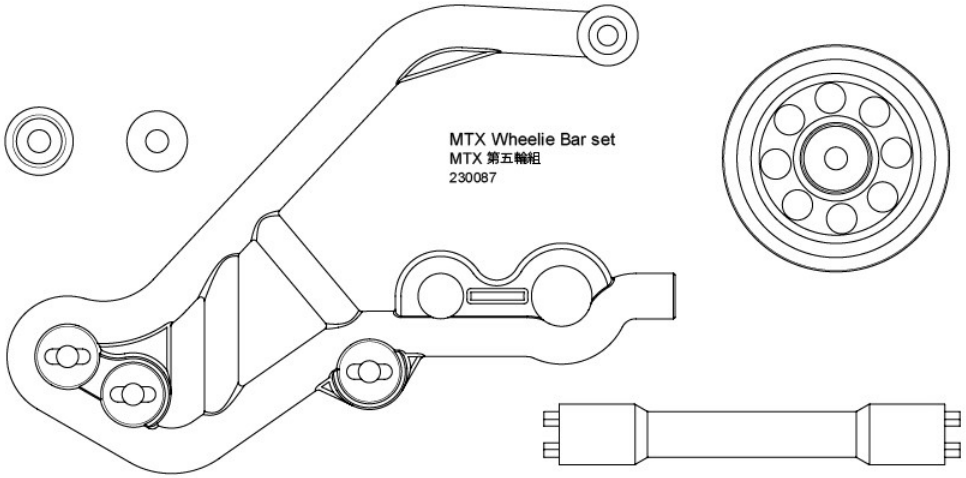

MTX Wheelie Bar set
MTX 第五輪組
230087

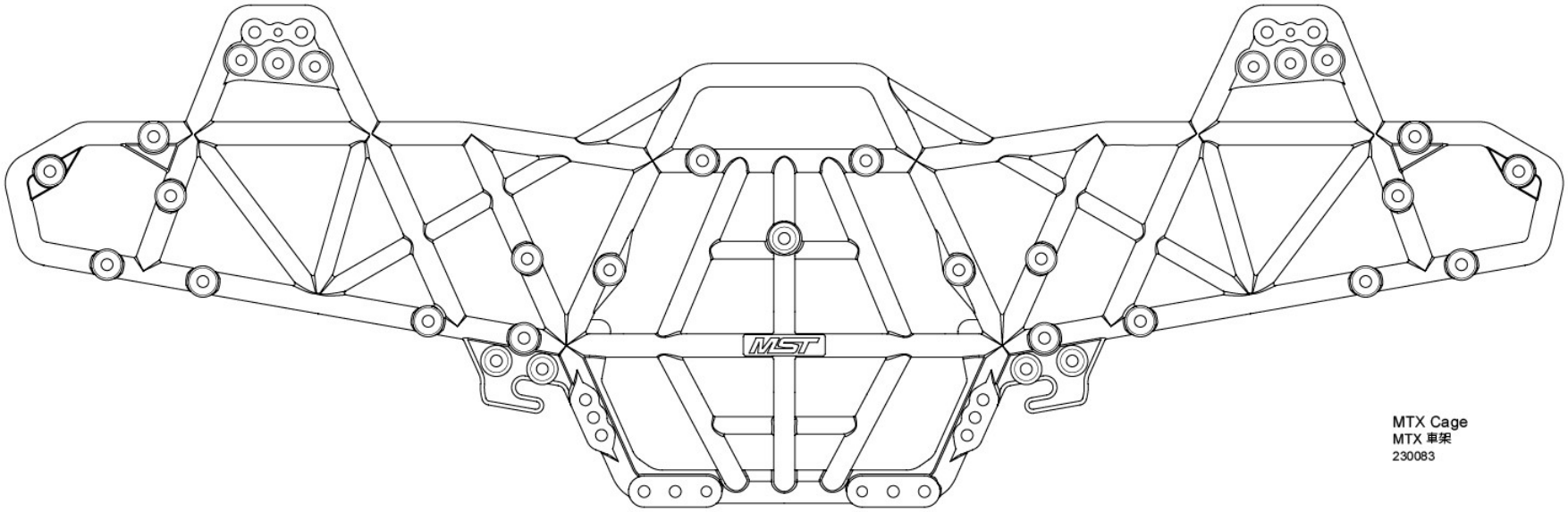

MTX Cage
MTX 車架
230083

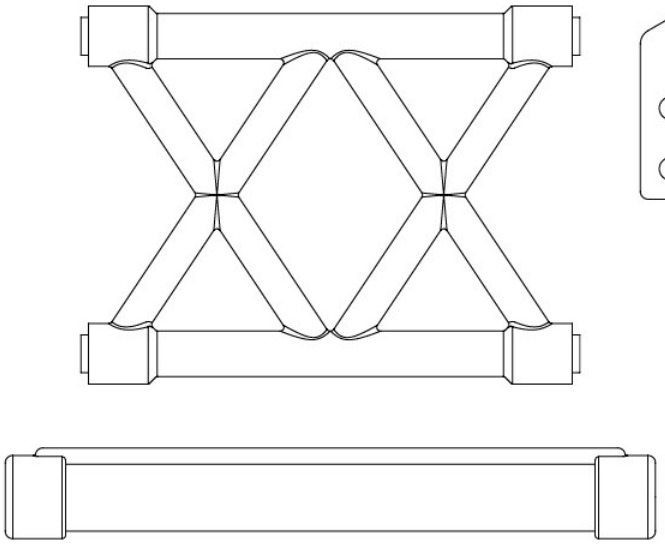

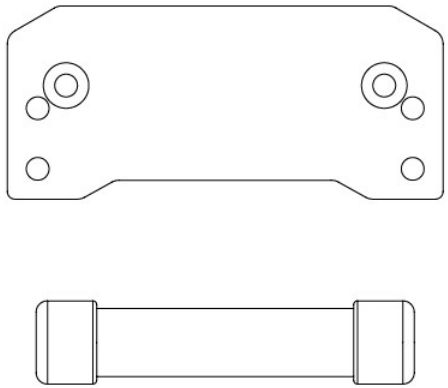

MTX Gear box chassis set
MTX 減速箱底盤組
230081

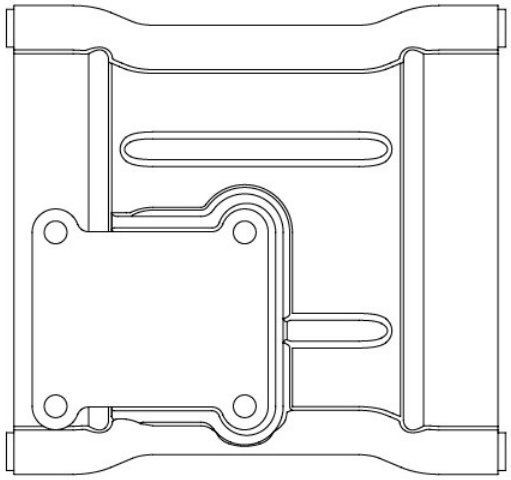

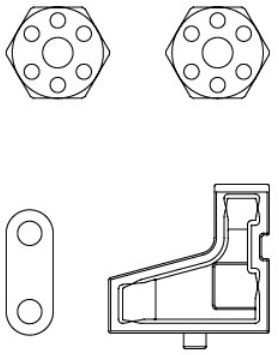

CMX Damper stay set ×2
CMX 避震架組
230023

## PARTS CODE

| | |
|---|---|
| 103023Y | Monster truck wheels w/ monster truck tire (yellow) |
| 110001 | Round head screw M3×6 (10) |
| 110002 | Round head screw M3×8 (10) |
| 110005 | Countersunk screw M3×8 (10) |
| 110008 | Set screw M3×25 (6) |
| 110011 | Cap screw M3×6 (6) |
| 110013 | E-clip 2.0 (10) |
| 110016 | R-clip 6.0 (10) |
| 110017 | Shaft 2×9.8 (10) |
| 110018 | Shaft 2×13.8 (5) |
| 110021 | Lock nut M3 (5) |
| 110023 | Set screw M3×16 (6) |
| 110026 | Round head screw M3×10 (10) |
| 110029 | Round head screw M3×12 (6) |
| 110035 | Set screw M3×3 (6) |
| 110037 | E-clip 4.0 (10) |
| 110041 | Countersunk screw M3×5 (10) |
| 110043 | Countersunk screw M3×12 (10) |
| 110044 | Round head screw M2×6 (6) |
| 110047 | Spacer 3×6×0.5 (8) |
| 110048 | Spacer 3×8×0.5 (8) |
| 110049 | Round head screw M3×5 (10) |
| 110050 | Round head screw M2×5 (6) |
| 110052 | Countersunk screw M3×10 (10) |
| 110061 | Round head screw M3×14 (6) |
| 110073 | Countersunk screw M3×16 (6) |
| 110076 | Round head screw M3×25 (6) |
| 110081 | Countersunk screw M3×14 (6) |
| 110084 | Round head screw M2×10 (6) |
| 110085 | Round head screw M2×16 (6) |
| 110086 | Round head screw M3×16 (6) |
| 110087 | Round head screw M3×18 (6) |
| 110089 | Round head screw M3×30 (6) |
| 110090 | Shaft screw M4×4×12 (6) |
| 110091 | Cap screw M3×40 (6) |
| 110092 | King pin screw (4) |
| 110096 | Lock nut M4 (5) |
| 110105 | Cap screw M1.6×10 (10) |
| 120001 | Ball bearing 10×15 (4) |
| 120002 | Ball bearing 5×10 (4) |
| 120011 | Ball bearing 5×11 (4) |
| 120019 | Ball bearing 8×12 (2) |
| 130023 | O-ring P3 (black) (10) |
| 130028 | Damper O-ring P3 (blue) (10) |
| 130032 | Damper cap O-ring (10) |
| 130050 | Cush drive rubber blocks (6) |
| 130051 | Receiver case seals |
| 210057 | Damper cap set |
| 210582 | MTX Sway bar set |
| 230014 | CMX Deceleration gear set |
| 230016 | CMX Ball connector set |
| 230017 | CMX Link set |
| 230022 | CMX Axle cover |
| 230023 | CMX Damper stay set |
| 230026 | CMX Car body post set |
| 230028 | CMX Deceleration gear box set |
| 230029 | CMX Axle lockout set |
| 230033 | CMX Heavy duty locker set |
| 230076 | MTX Dust cover |
| 230077 | MTX C hub carrier set |
| 230078 | MTX Knuckle set |
| 230079 | MTX Body post mount |
| 230080 | MTX Electrics tray |
| 230081 | MTX Gear box chassis set |
| 230082 | MTX Battery strap |
| 230083 | MTX Cage |
| 230084 | Damper parts (2) |
| 230087 | MTX Wheelie Bar set |
| 230088 | Cush drive rubber gear M06-70T |
| 230089 | Receiver case set |
| 230090 | CMX Driveshaft |
| 230091 | CMX Wheelbase 267mm accessories |
| 230120R | MSA Axle bearing cap set |
| 310066 | Bevel gear shaft |
| 310067 | 5×26.8 Shaft |
| 310068 | Gear shaft |
| 310069 | Main gear shaft |
| 310073 | Bevel gear set 36-15 |
| 310074BK | CMX Motor mount (black) |
| 310107 | CVD Axle (2) |
| 310109 | Rear axle (2) |
| 310110 | Piston rod (4) |
| 310111 | Coil spring 72mm (4) |
| 310113 | Diff. gear set |
| 310117 | 2WD Axle (2) |
| 820126 | NS High-torque servo saver |

## 部品編號

| | |
|---|---|
| 103023Y | 大腳胎框組 (黃) |
| 110001 | 六角半圓頭螺絲 M3×6 (10) |
| 110002 | 六角半圓頭螺絲 M3×8 (10) |
| 110005 | 六角沉頭螺絲 M3×8 (10) |
| 110008 | 六角止付螺絲 M3×25 (6) |
| 110011 | 六角有頭螺絲 M3×6 (半牙) (6) |
| 110013 | E扣 2.0 (10) |
| 110016 | R銷 6.0 (10) |
| 110017 | 插銷 2×9.8 (10) |
| 110018 | 插銷 2×13.8 (5) |
| 110021 | 防鬆螺帽 M3 (5) |
| 110023 | 六角止付螺絲 M3×16 (6) |
| 110026 | 六角半圓頭螺絲 M3×10 (10) |
| 110029 | 六角半圓頭螺絲 M3×12 (6) |
| 110035 | 六角止付螺絲 M3×3 (6) |
| 110037 | E扣 4.0 (10) |
| 110041 | 六角沉頭螺絲 M3×5 (10) |
| 110043 | 六角沉頭螺絲 M3×12 (10) |
| 110044 | 六角半圓頭螺絲 M2×6 (6) |
| 110047 | 墊片 3×6×0.5 (8) |
| 110048 | 墊片 3×8×0.5 (8) |
| 110049 | 六角半圓頭螺絲 M3×5 (10) |
| 110050 | 六角半圓頭螺絲 M2×5 (6) |
| 110052 | 六角沉頭螺絲 M3×10 (10) |
| 110061 | 六角半圓頭螺絲 M3×14 (6) |
| 110073 | 六角沉頭螺絲 M3×16 (6) |
| 110076 | 六角半圓頭螺絲 M3×25 (6) |
| 110081 | 六角沉頭螺絲 M3×14 (6) |
| 110084 | 六角半圓頭螺絲 M2×10 (6) |
| 110085 | 六角半圓頭螺絲 M2×16 (6) |
| 110086 | 六角半圓頭螺絲 M3×16 (6) |
| 110087 | 六角半圓頭螺絲 M3×18 (6) |
| 110089 | 六角半圓頭螺絲 M3×30 (6) |
| 110090 | 銷釘螺絲 M4×4×12 (6) |
| 110091 | 六角有頭螺絲 M3×40 (半牙) (6) |
| 110092 | 大王螺絲 (4) |
| 110096 | 防鬆螺帽 M4 (5) |
| 110105 | 六角有頭螺絲 M1.6×10 (10) |
| 120001 | 培林 10×15 (4) |
| 120002 | 培林 5×10 (4) |
| 120011 | 培林 5×11 (4) |
| 120019 | 培林 8×12 (2) |
| 130023 | O環 P3 (黑) (10) |
| 130028 | 阻尼器O環 P3 (藍) (10) |
| 130032 | 避震上蓋O環 (10) |
| 130050 | 緩衝膠圈 (6) |
| 130051 | 防水膠圈組 |
| 210057 | 避震器上下蓋組 |
| 210582 | MTX 防傾桿組 |
| 230014 | CMX 減速齒組 |
| 230016 | CMX 球頭組 |
| 230017 | CMX 拉桿組 |
| 230022 | CMX 車軸殼 |
| 230023 | CMX 避震架組 |
| 230026 | CMX 車殼支柱組 |
| 230028 | CMX 減速箱組 |
| 230029 | CMX 車軸固定套組 |
| 230033 | CMX 直軸連接座組 |
| 230076 | MTX 防塵殼組 |
| 230077 | MTX 轉向C座組 |
| 230078 | MTX 轉向座組 |
| 230079 | MTX 車殼支柱座組 |
| 230080 | MTX 電裝座組 |
| 230081 | MTX 減速箱底盤組 |
| 230082 | MTX 電池壓板組 |
| 230083 | MTX 車架 |
| 230084 | 避震膠件組 (2) |
| 230087 | MTX 第五輪組 |
| 230088 | 緩衝齒座組 M06-70T |
| 230089 | 接收機盒組 |
| 230090 | CMX 傳動軸 |
| 230091 | CMX 軸距267mm配件 |
| 230120R | MSA 車橋軸承蓋組 |
| 310066 | 傘齒軸 |
| 310067 | 5×26.8 齒軸 |
| 310068 | 輸出軸 |
| 310069 | 主齒軸 |
| 310073 | 傘齒組 36-15 |
| 310074BK | CMX 馬達座 (黑) |
| 310107 | CVD 輪軸 (2) |
| 310109 | 後輪軸 |
| 310110 | 避震軸心 (4) |
| 310111 | 避震彈簧 72mm (4) |
| 310113 | 傘差齒輪組 |
| 310117 | 二驅輪軸 (2) |
| 820126 | NS 高扭力伺服緩衝器 |

026191