CFX-W

OFF ROAD

4WD HIGH PERFORMANCE OFF ROAD CAR

READY-TO-RUN RTR

MST

max SPEED TECHNOLOGY

MST OWNERS CLUB ADVENTURES OFF-ROAD MST

4X4 OFF ROAD

EXPLODED MANUAL



CREEK MUD FOREST ROCKY SNOW SAND

WHEELBASE : Varied by The Car Body
WIDTH : 230mm
GEAR RATIO = 1:36.3~ 1:53.4
TIRE WIDTH / DIAMETER : 40×120mm
Shaft-Driven Full-Time 4WD
Front and Rear MPA-axle

WWW.RC-MST.COM

※SPECIFICATION ARE SUBJECT TO CHANGE WITHOUT NOTICE

CFX-W
4WD HIGH PERFORMANCE OFF ROAD CAR

READY-TO-RUN RTR

MST
max speed technology

Appreciate for your choice of **CFX-W RTR**! You will be impressed with its performance and beauty.
Please prepare additional parts as car battery, transmitter battery, and charger.
Please read the manuals for the electronics setting and operations.
If you have doubt or need assistance, please contact the purchased shop or hobby shop for help, many thanks!

首先感謝你購入 **CFX-W RTR** 這項產品，您將擁有一部兼具性能與美型的攀岩車。
在首次操作前，有以下幾項須要另行購置的物件；車用電池、遙控器用電池、充電器。
備妥上述物件後，並詳閱各說明書。
如需其他協助，請向原購買店家，或遙控模型店詢問！謝謝！

PLEASE FOLLOW BELOW
OPERATIONS BEFORE OPERATION. 請於使用前, 執行以下操作



1. Install transmitter batteries.
2. Connector ESC and battery.
3. Switch on the transmitter.
4. Trims the transmitter in neutral.
5. Switch on the ESC.
6. Completed.

1. 安裝遙控器電池
2. 聯結車用電池與電子變速器
3. 打開遙控器電源
4. 調整遙控器各微調器至中立點
5. 打開電子變速器電源
6. 完成

※ Please play this product in opening or safety area.
請於空曠或安全無虞的場所，使用本項產品。

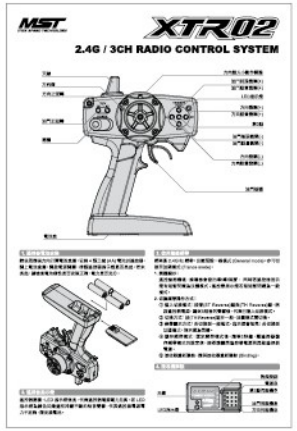

※ Please refer to instruction of transmitter & receiver performance.
遙控器&接收機功能說明請參閱詳細說明書。

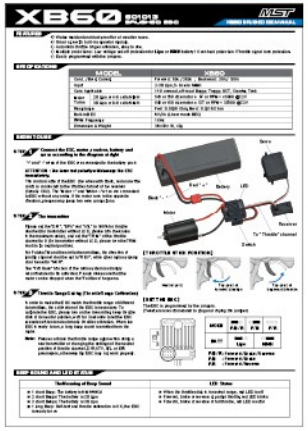

※ Please refer to instruction of ESC performance.
電子變速器功能說明請參閱詳細說明書。

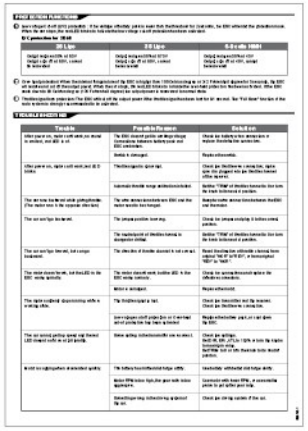

FACTORY ELECTRONIC SETTING
原廠電裝配線圖

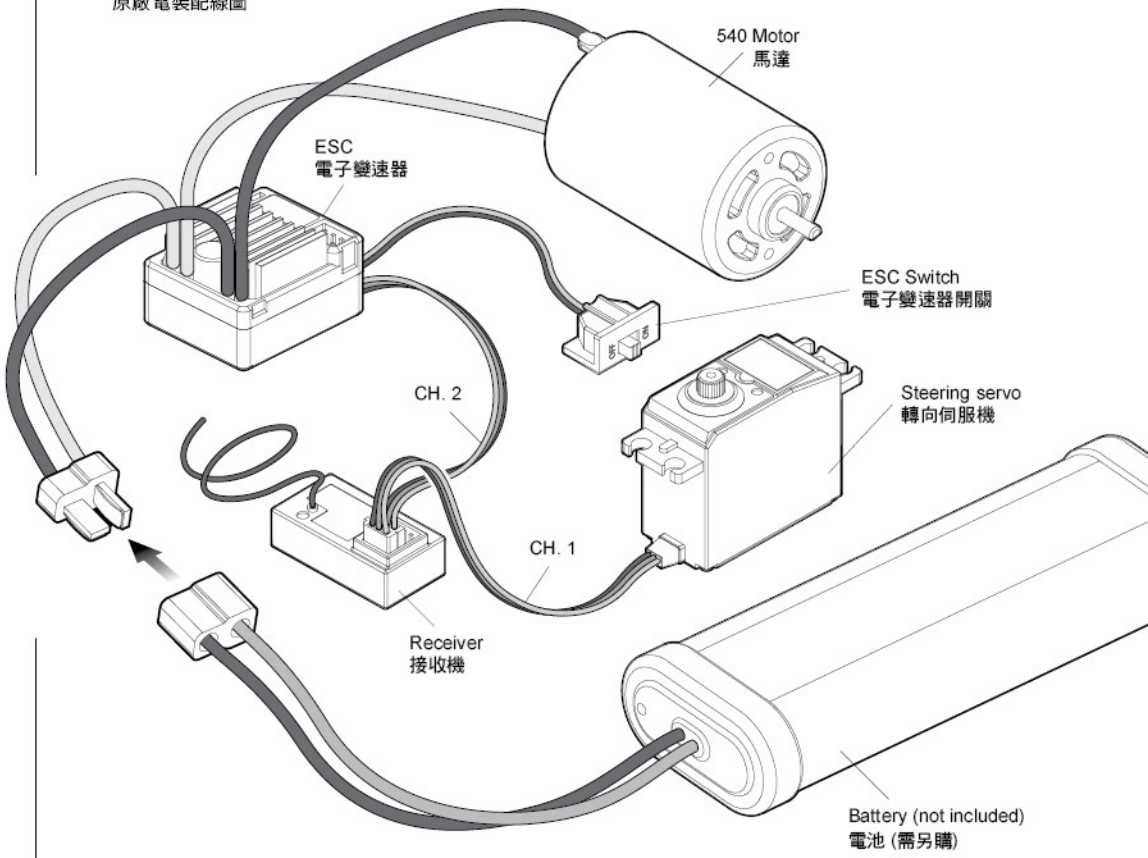

GEAR RATIO			
Pinion Gear	Spur Gear 62T	Pinion Gear	Spur Gear 62T
17	53.35	22	41.23
18	50.39	23	39.43
19	47.74	24	37.79
20	45.35	25	36.28
21	43.19		

◄ ATTACHING BATTERY
安裝電池

※ The assembly and conservation method may be different by specification of battery.
電池的安裝方式會因為廠牌規格而有些微差異，電池的使用方式與保存方式，也會因電池種類而有所不同。

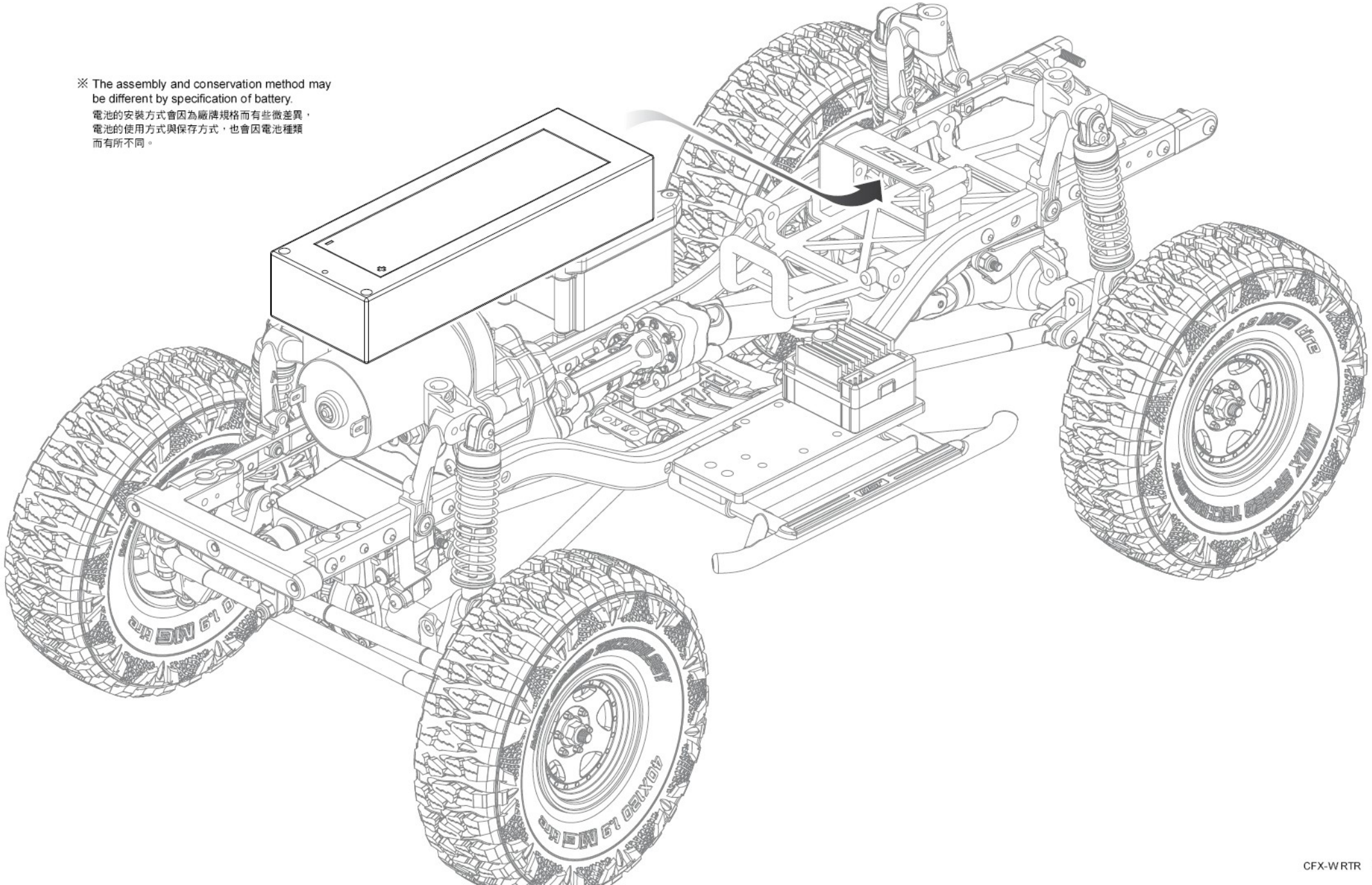

CFX-W OFF ROAD 1/10
4WD HIGH PERFORMANCE OFF ROAD CAR
READY-TO-RUN RTR

EXPLODED MANUAL

MST max speed technology

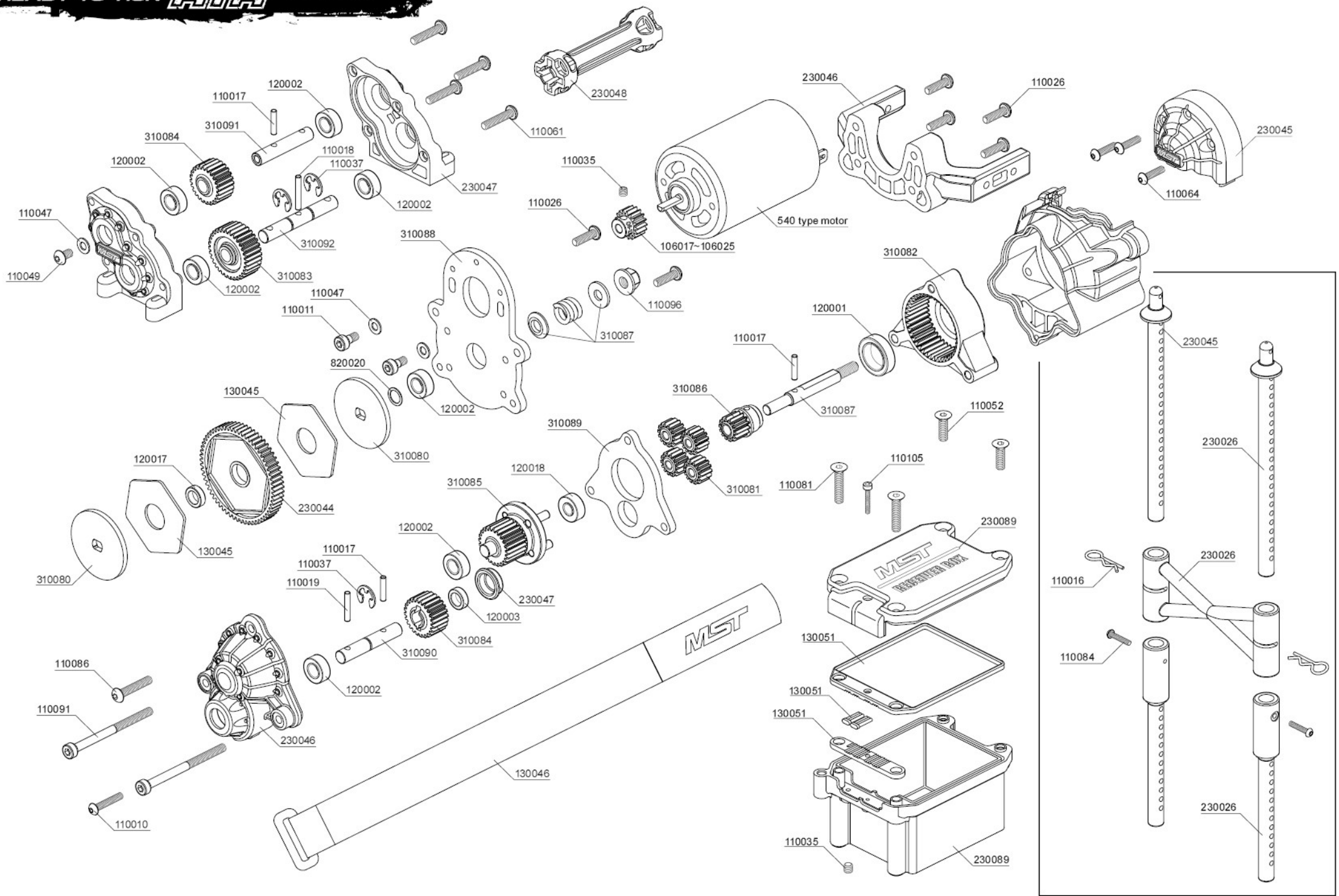

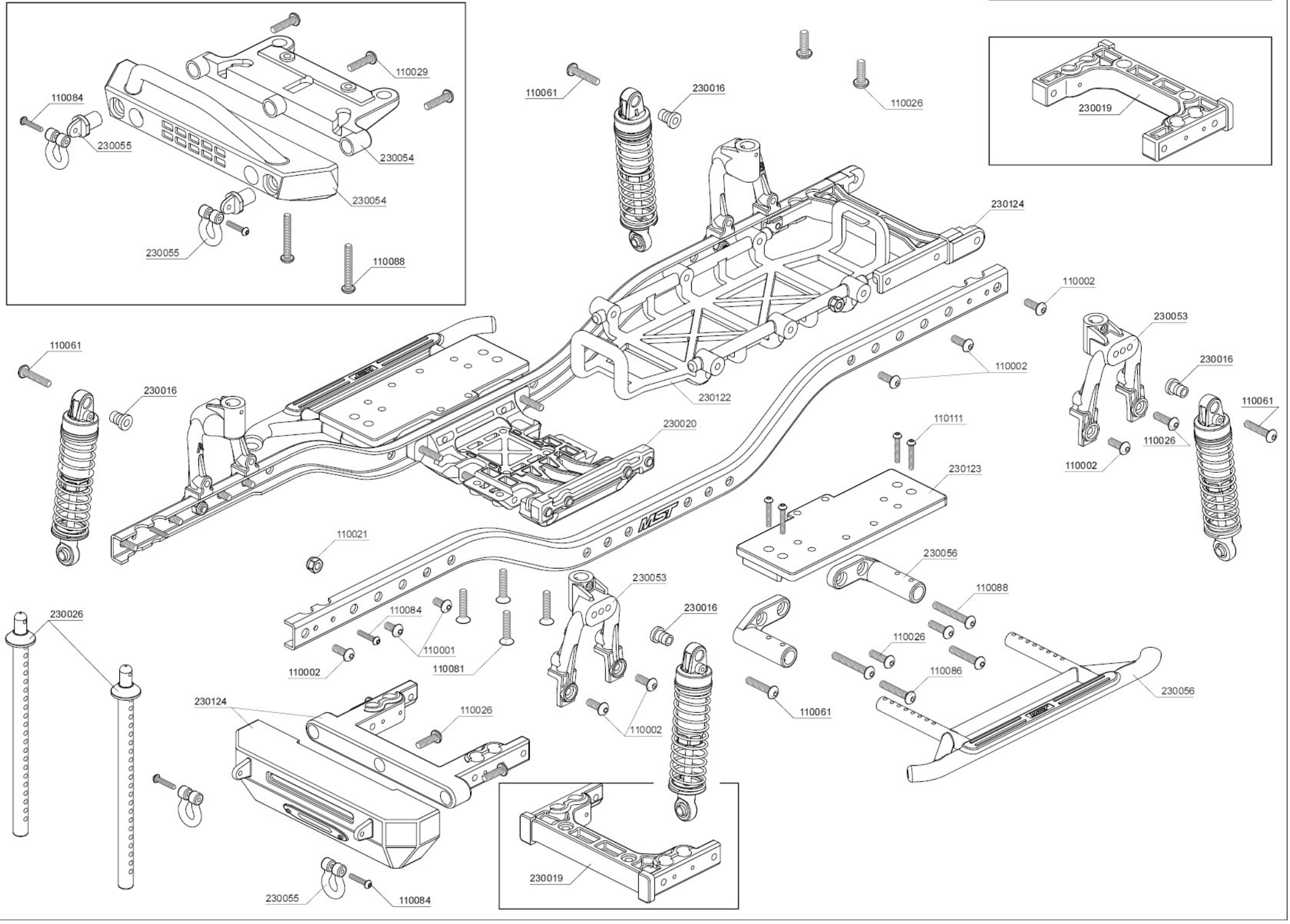
110029
110084
230055
230054
230054
230055
110088
110061
230016
110026
230019
230124
110002
230053
110061
230016
110002
230016
230122
110061
230020
110111
110026
110002
230123
110021
230056
230053
110088
230026
110084
230016
110001
110026
110002
110081
110086
230056
230124
110026
110061
110002
230019
230055
110084

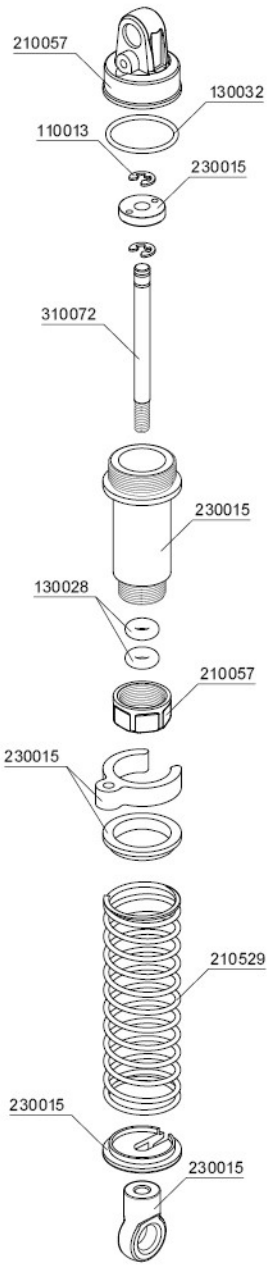
210057
130032
110013
230015
310072
230015
130028
210057
230015
210529
230015
230015

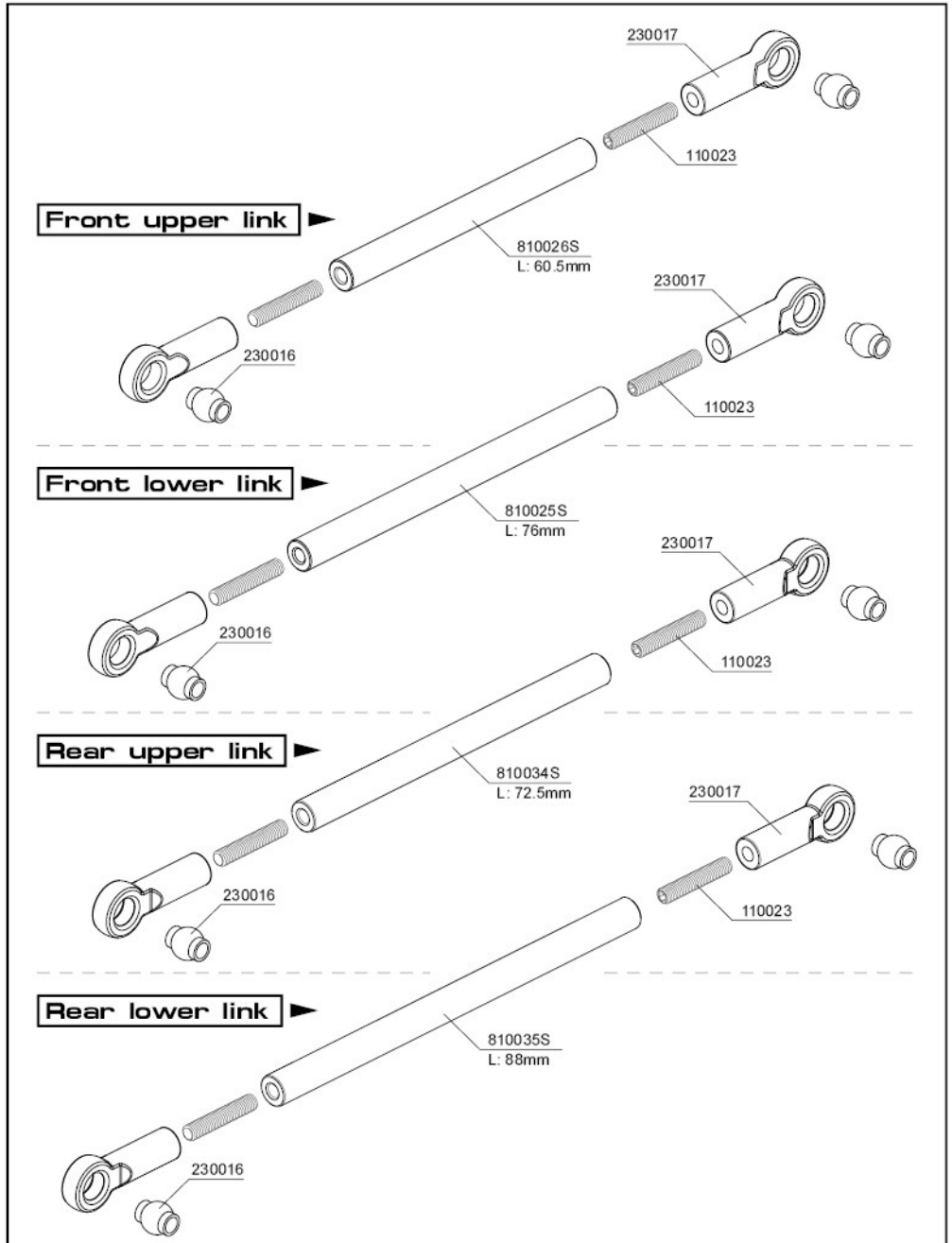
Front upper link
230017
110023
810026S
L: 60.5mm
230017
230016
110023
Front lower link
810025S
L: 76mm
230017
230016
110023
Rear upper link
810034S
L: 72.5mm
230017
230016
110023
Rear lower link
810035S
L: 88mm
230016

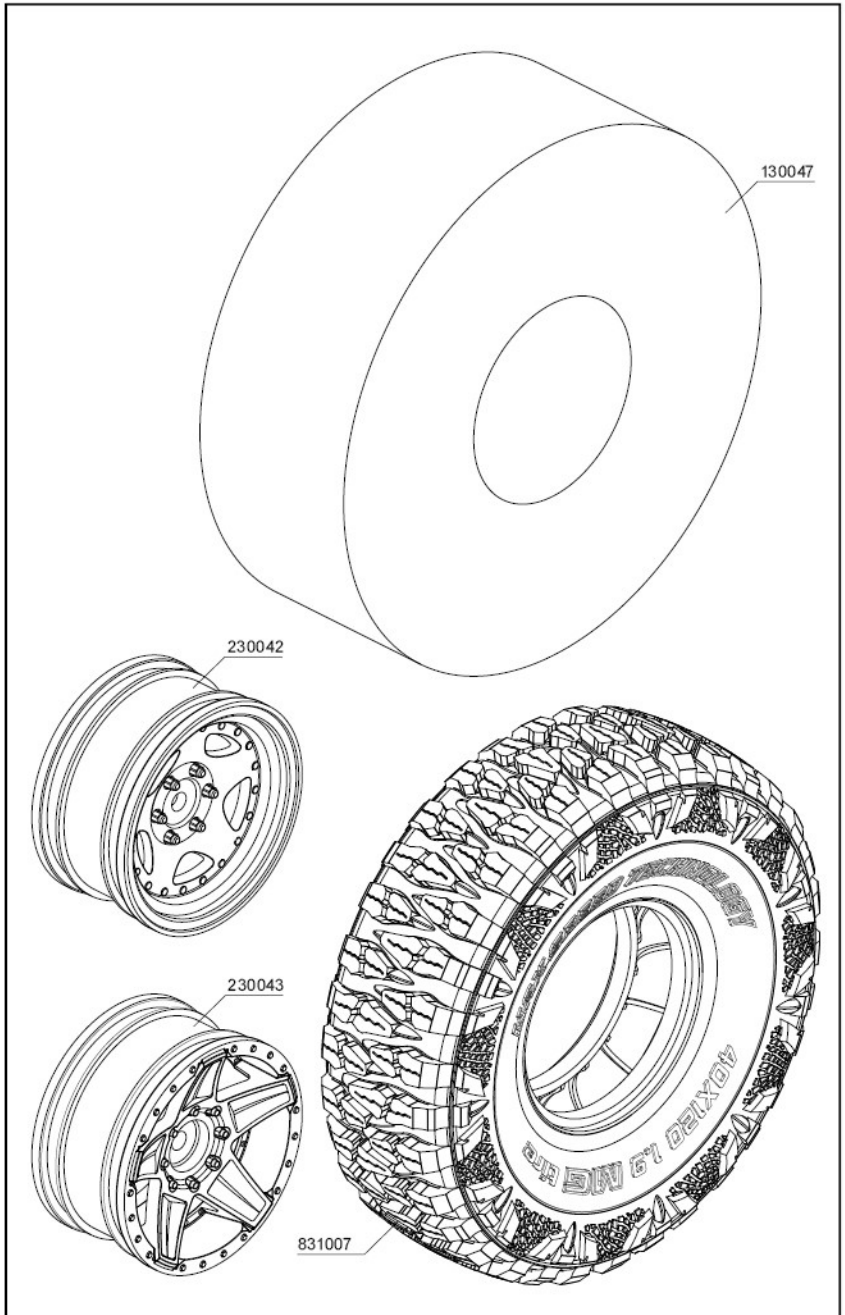
130047
230042
230043
831007

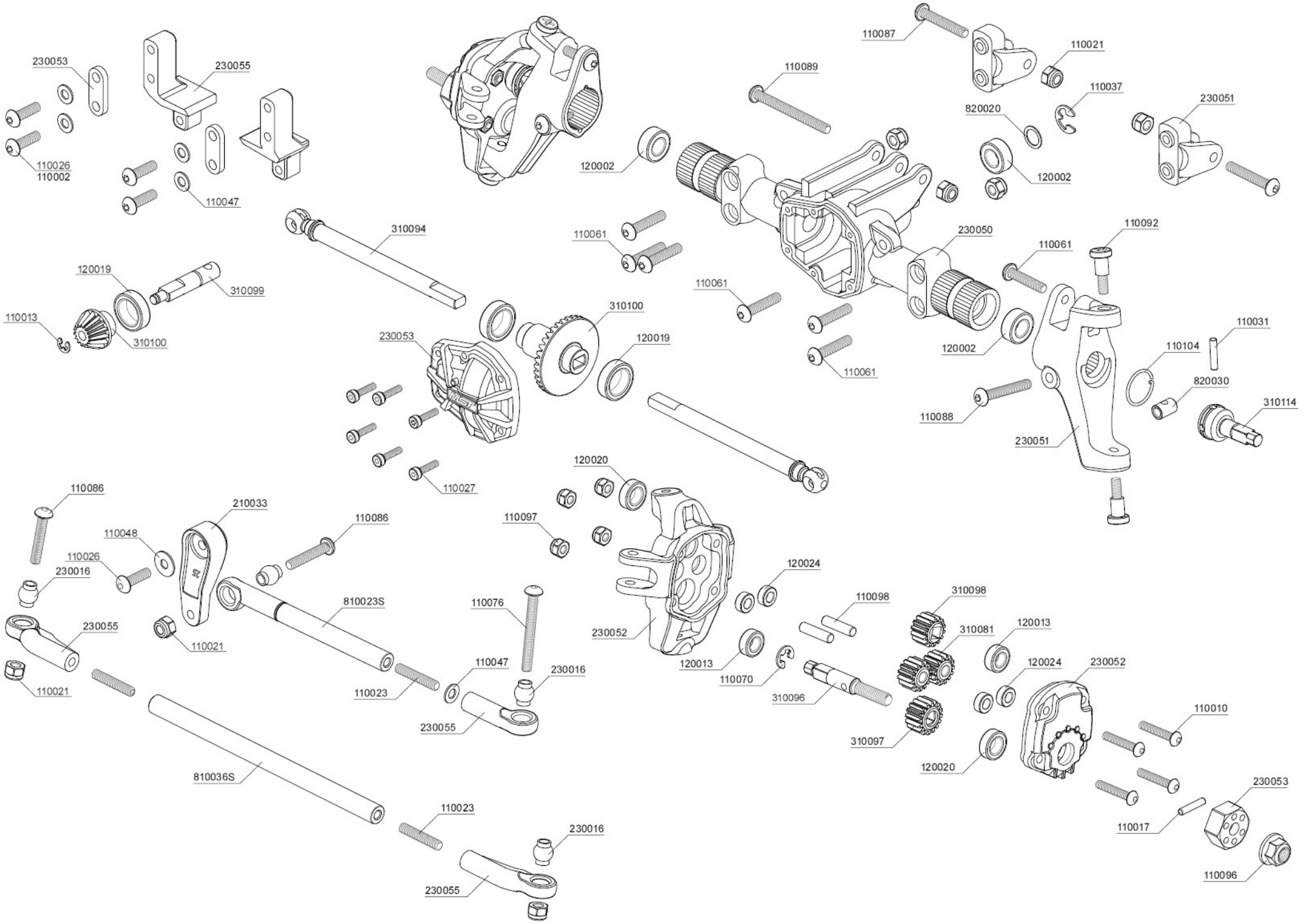

230053
230055
110026
110002
110047
110087
110021
110089
110037
820020
230051
120002
120002
310094
110061
230050
110092
110061
120019
310099
110061
110013
310100
310100
230053
120019
120002
110031
110104
110061
820030
110088
310114
230051
110027
120020
110086
210033
110086
110097
110048
110026
230016
120024
810023S
110076
110098
310098
230055
110021
230052
310081
120013
110047
230016
120013
120024
230052
110021
110023
110070
310096
110010
230055
310097
120020
810036S
230053
110023
110017
230016
110096
230055

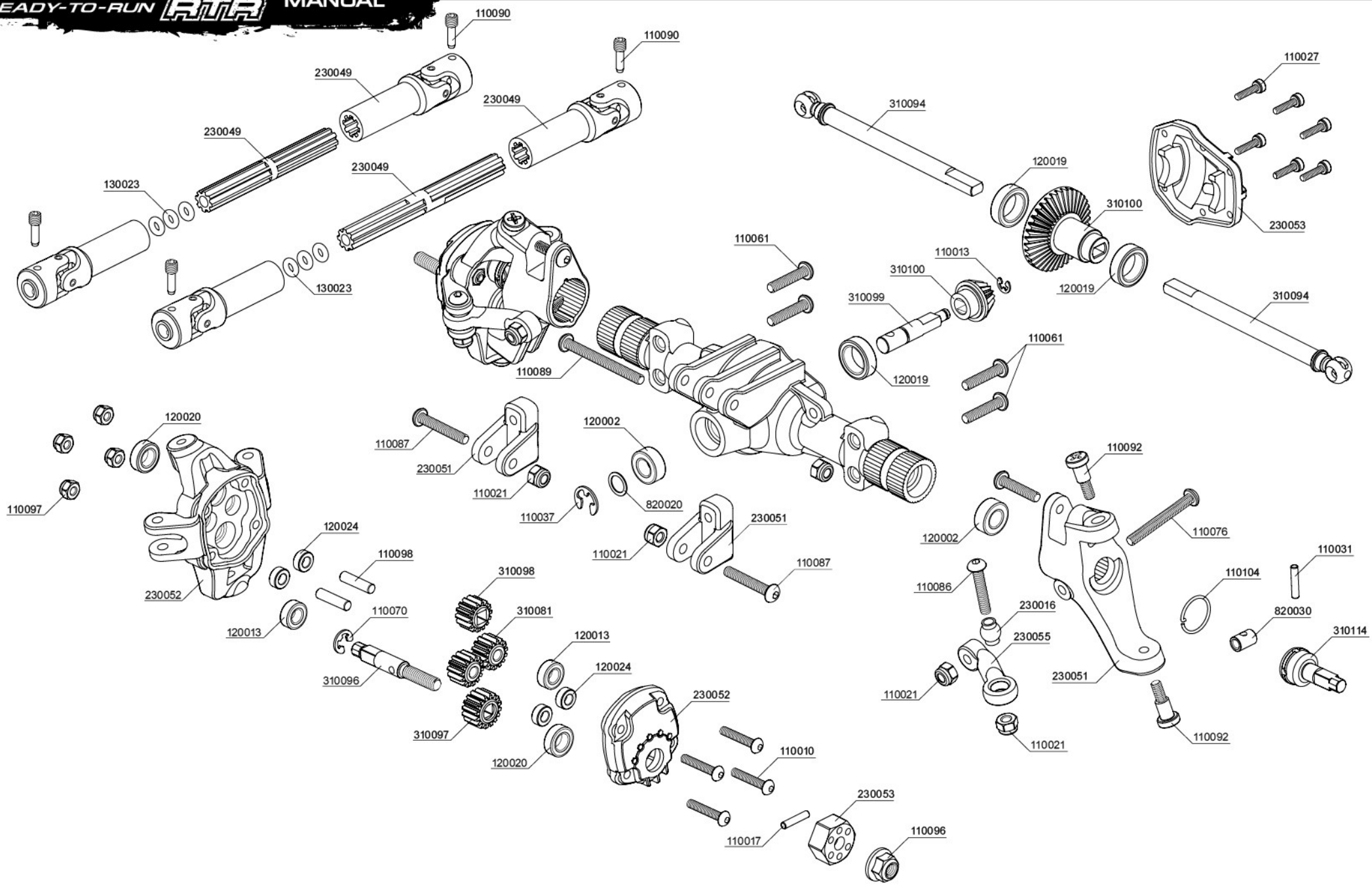
110090
110090
230049
230049
230049
230049
130023
130023
110061
110089
310094
120019
310100
110027
230053
110013
310100
310099
120019
110061
310094
120019
120020
110097
230052
110087
230051
110021
120002
820020
110037
230051
110087
110021
110092
120002
110076
110086
230016
230055
110021
230051
110092
110031
110104
820030
310114
120024
110098
120013
310098
310081
110070
310096
310097
120013
120024
120020
230052
110010
230053
110017
110096

PARTS



M2×10 screw ×16
圓頭螺絲
110084



M2.5×10 screw ×3
圓頭螺絲
110064



M2.5×14 screw ×17
圓頭螺絲
110010



M3×5 screw ×1
圓頭螺絲
110049



M3×6 screw ×4
圓頭螺絲
110001



M3×8 screw ×16
圓頭螺絲
110002



M3×10 screw ×17
圓頭螺絲
110026



M3×12 screw ×3
圓頭螺絲
110029



M3×14 screw ×22
圓頭螺絲
110061



M3×16 screw ×9
圓頭螺絲
110086



M3×18 screw ×4
圓頭螺絲
110087



M3×20 screw ×8
圓頭螺絲
110088



M3×25 screw ×3
圓頭螺絲
110076



M3×30 screw ×2
圓頭螺絲
110089



M3×10 screw ×4
沉頭螺絲
110052



M3×14 screw ×6
沉頭螺絲
110081



M3×16 screw ×2
沉頭螺絲
110073



M3×40 Cap screw ×2
有頭螺絲
110091



M1.6×10 Cap screw ×1
有頭螺絲
110105



M2×8 Cap screw ×12
有頭螺絲
110027

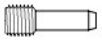

Shaft screw ×4
銷釘螺絲
110090



M3×16 screw ×20
止付螺絲
110023



M3×6 Cap screw ×2
有頭螺絲
110011

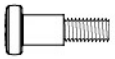

King pin screw ×8
大王螺絲
110092



Bevel gear shaft ×2
小傘齒軸
310099



2×9.8 Shaft ×7
插銷
110017



2×10.8 Shaft ×4
插銷
110031



2×11.8 Shaft ×2
插銷
110019



3×11.8 Shaft ×8
插銷
110098



2×13.8 Shaft ×1
插銷
110018



3×6×0.5 Spacer ×9
墊片
110047



3×8×0.5 Spacer ×3
墊片
110048



5×7×0.3 Spacer ×3
墊片
820020



Gear Shaft B ×1
齒輪軸心 B
310091



Gear Shaft A ×1
齒輪軸心 A
310090



Gear Shaft C ×1
齒輪軸心 C
310092



MPA Axle ×4
MPA 輪軸
310096

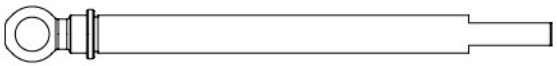

MPA CVD Axle ×4
MPA CVD 輪軸
310094

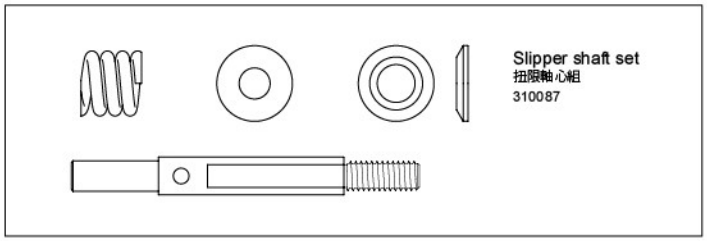

Slipper shaft set
扭限軸心組
310087



E-clip 2.0 ×10
E扣
110013

E-clip 3.0 ×4
E扣
110070

E-clip 4.0 ×5
E扣
110037

G-clip 11.0 ×4
G扣
110104

Cross joint ×4
連接軸
820030

Nut M3 ×2
螺帽
110093

Lock nut M2.5 ×16
防脫螺帽
110097

Lock nut M3 ×31
防脫螺帽
110021

Lock nut M4 ×5
防脫螺帽
110096

Gear B 14T ×12
齒輪 B 14T
310081

Gear C 14T ×4
齒輪 C 14T
310098

Gear 16T ×4
齒輪 16T
310097

Gear B 24T ×2
齒輪 B 24T
310084

Gear 32T ×1
齒輪 32T
310083

3×6×2.5 Bearing ×16
軸承
120024

5×8×2.5 Bearing ×1
軸承
120017

4×8×3 Ball bearing ×8
培林
120013

4×10×4 Ball bearing ×1
培林
120018

5×8×2.5 Ball bearing ×1
培林
120003

5×9×3 Ball bearing ×8
培林
120020

5×10×4 Ball bearing ×13
培林
120002

8×12×3.5 Ball bearing ×6
培林
120019

10×15×4 Ball bearing ×1
培林
120001

R-clip ×9
R形扣
110016

MPA Wheel axle ×4
MPA 萬向接杯
310114

Gear A 14T ×1
齒輪 A 14T
310086

Gear A 24T ×1
齒輪 A 24T
310085

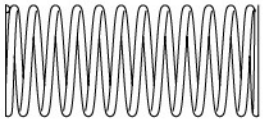

Coil spring 45mm (hard)(silver) ×4
避震彈簧 45mm (硬)(銀)
210529



Piston rod ×4
避震軸心
310072



Damper cylinder ×4
避震筒身
230015



Piston ×4
活塞
230015

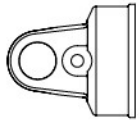

Cylinder cap ×4
避震器上蓋
210057



Spring spacer ×4
彈簧調整扣 1mm
230015



Rod guide cap ×4
避震器下蓋
210057



Damper retainer ×4
避震器彈簧座
230015



Spring spacer ×4
彈簧調整扣 2mm
230015

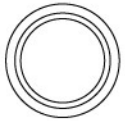

Spring holder ×4
彈簧托環
230015

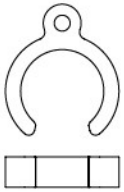

Spring spacer ×4
彈簧調整扣 4mm
230015

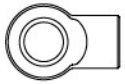

Damper adjuster ×4
避震器拉桿
230015

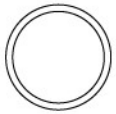

10.8×0.9 O-ring ×4
O環
130032



Damper O-ring P3 ×8
避震器O環
130028

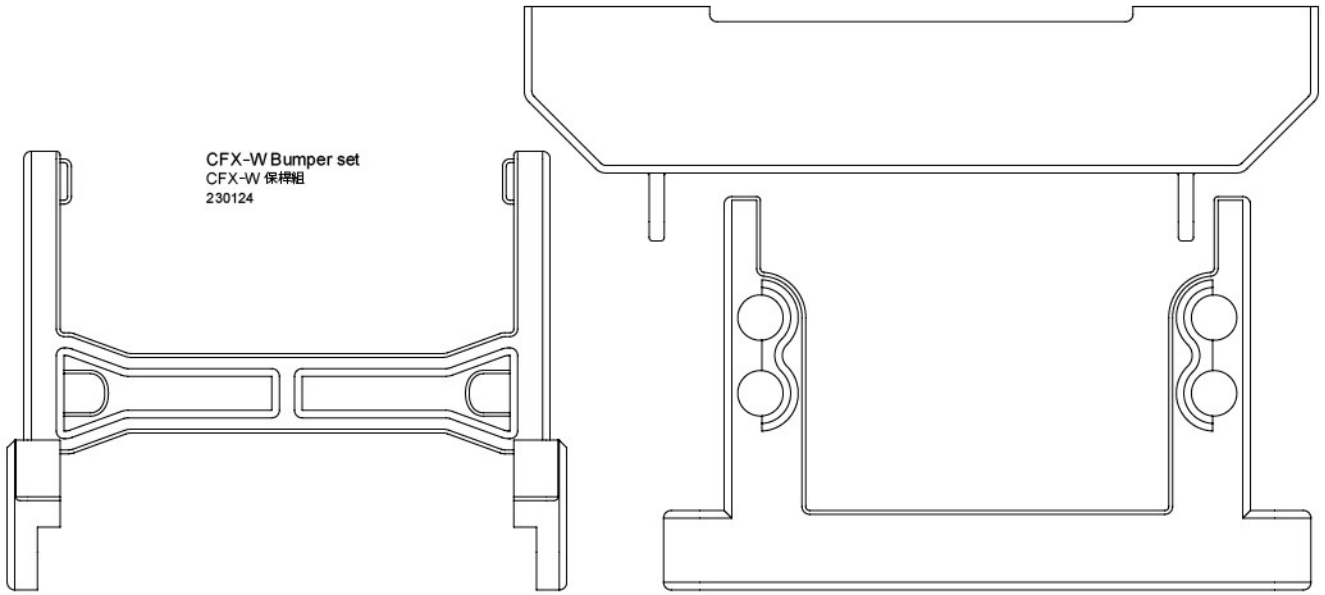

CFX-W Bumper set
CFX-W 保桿組
230124

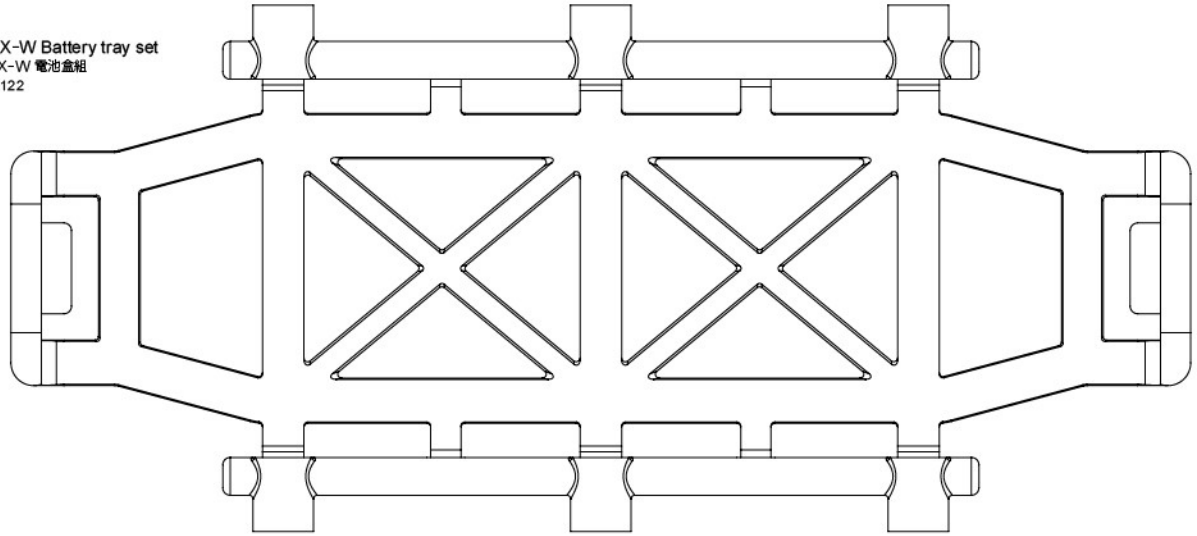

CFX-W Battery tray set
CFX-W 電池盒組
230122



Velcro strap 16×210mm
電池束帶
130046

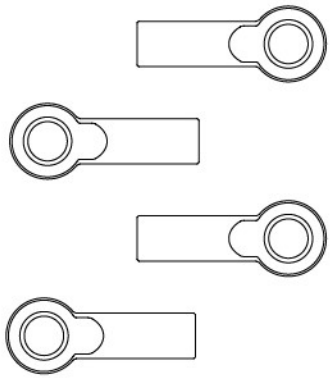

5.8 Rod ends set ×4
5.8 拉桿頭組
230057

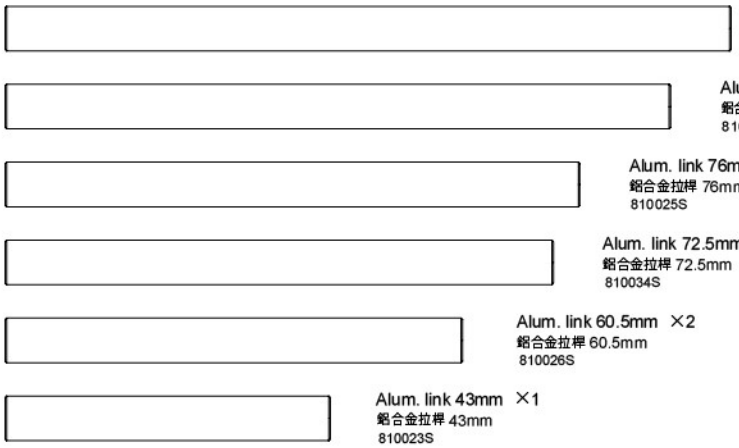

Alum. link 96mm ×1
鋁合金拉桿 96mm
810036S

Alum. link 88mm ×2
鋁合金拉桿 88mm
810035S

Alum. link 76mm ×2
鋁合金拉桿 76mm
810025S

Alum. link 72.5mm ×2
鋁合金拉桿 72.5mm
810034S

Alum. link 60.5mm ×2
鋁合金拉桿 60.5mm
810026S

Alum. link 43mm ×1
鋁合金拉桿 43mm
810023S

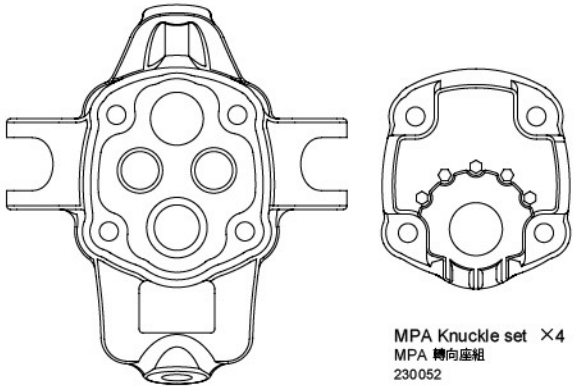

MPA Knuckle set ×4
MPA 轉向座組
230052

Gear 42T
齒輪 42T
310082

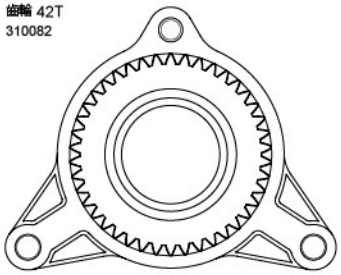

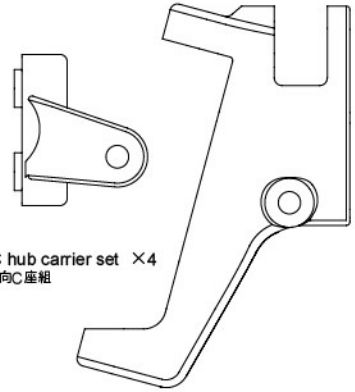

MPA C hub carrier set ×4
MPA 轉向C座組
230051

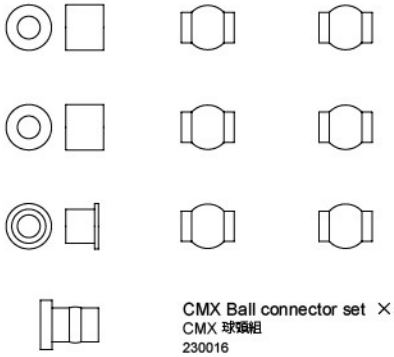

CMX Ball connector set ×5
CMX 球頭組
230016

CMX Car body post set ×2
CMX 車殼支柱組
230026

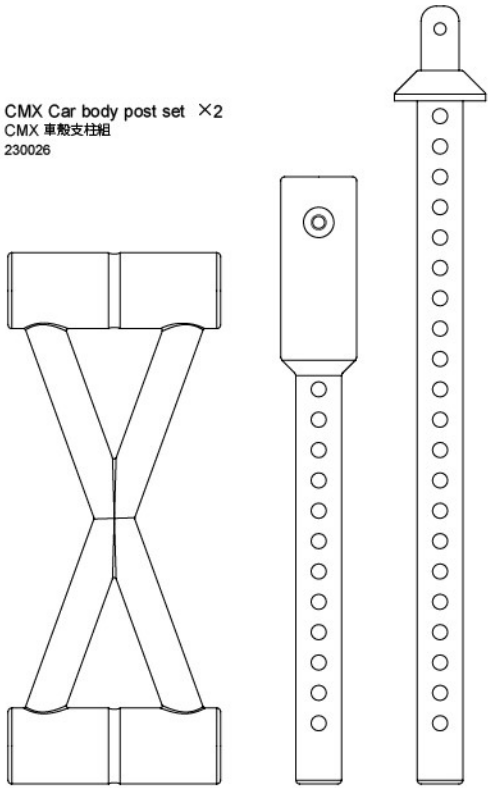

Bulkhead plate
減速箱軸板
310089

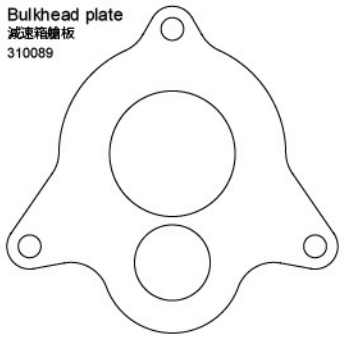

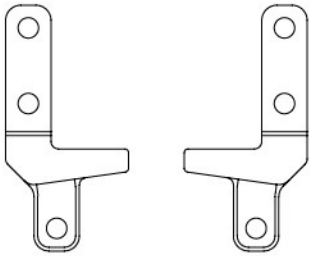

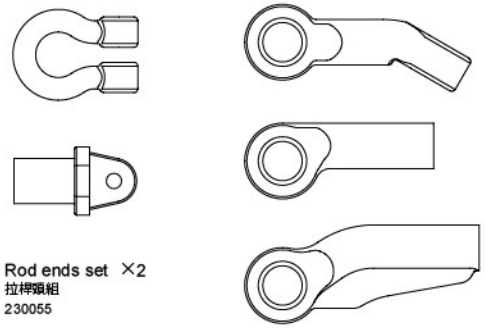

Rod ends set ×2
拉桿頭組
230055

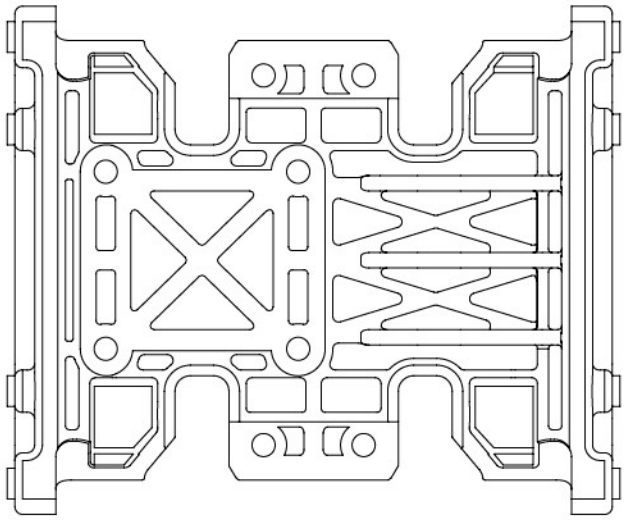

CMX Gear box chassis set
CMX 減速箱底盤組
230020

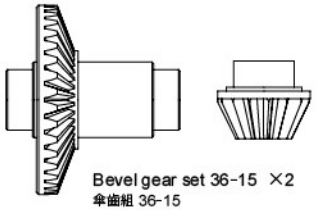

Bevel gear set 36-15 ×2
傘齒組 36-15
310100

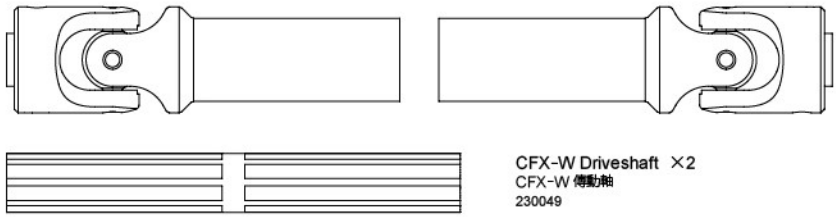

CFX-W Driveshaft ×2
CFX-W 傳動軸
230049

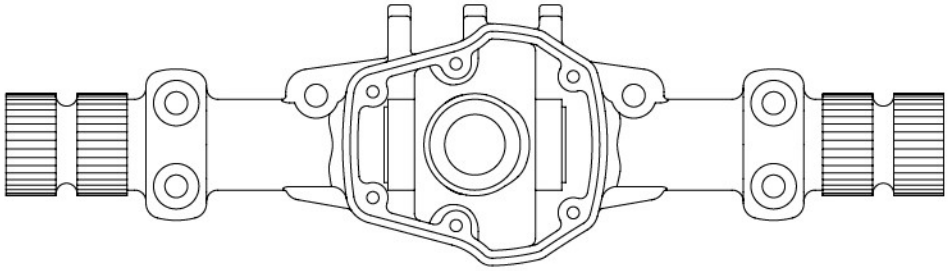

MPA Axle cover ×2
MPA 車軸殼
230050

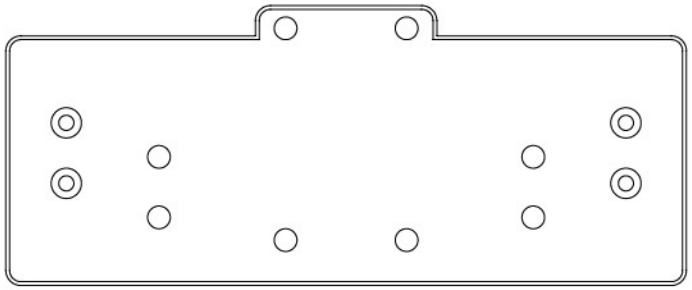

CFX-W Side plates set ×2
CFX-W 電裝托盤組
230123

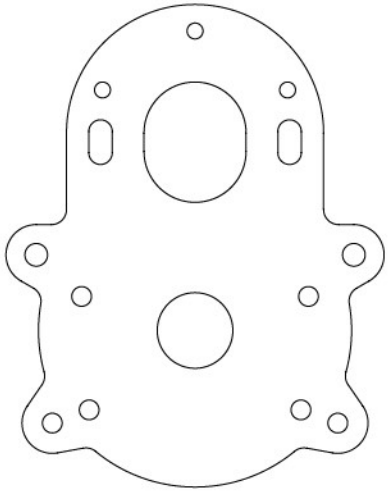

CFX Motor mount
CFX 馬達座
310088

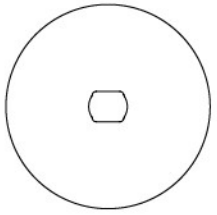

Slipper Plate ×2
扭限壓盤
310080

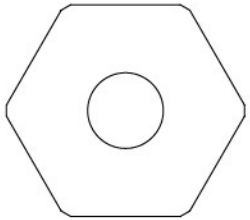

Slipper Pad ×2
扭限摩擦片
130045

M06 Spur gear 62T
M06 大齒盤 62T
230044

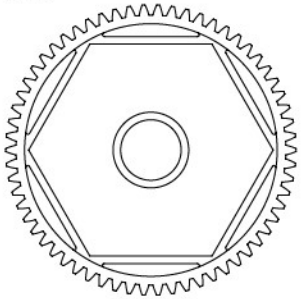

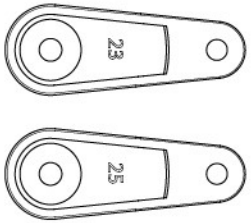

Servo horn set (long) (23T/25T)
伺服機舵片組-長 (23T/25T)
210033

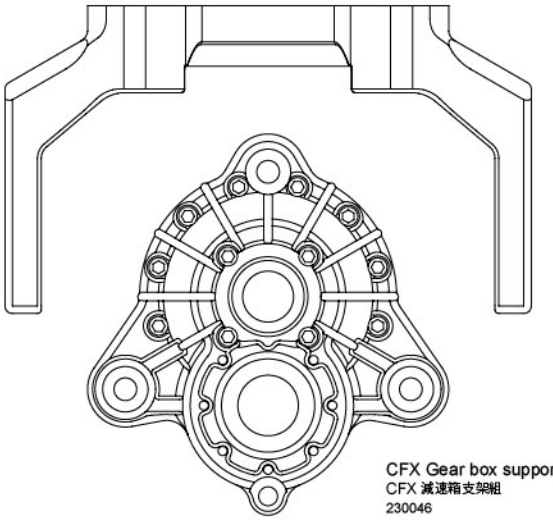

CFX Gear box support
CFX 減速箱支架組
230046

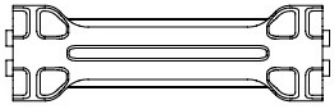

CFX Driveshaft set
CFX 驅動軸組
230048

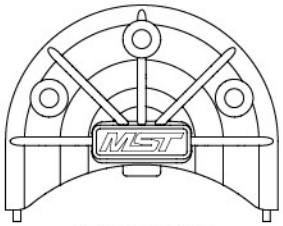

CFX Deceleration gear box set
CFX 減速箱組
230045

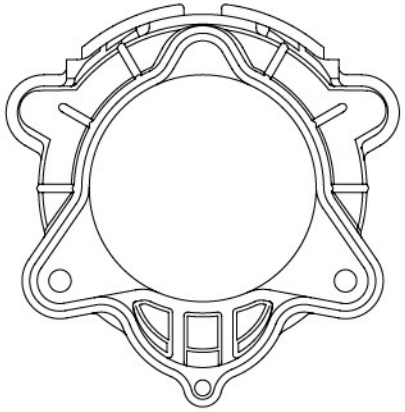

648 1.9" Wheel ×4
648 1.9" 輪框
230043

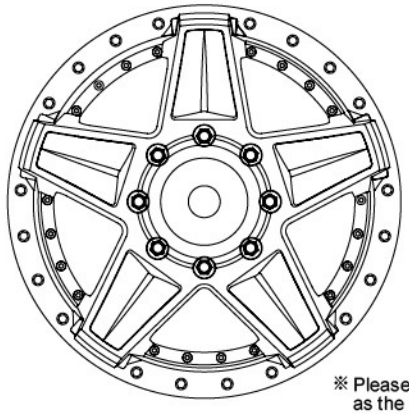

236 1.9" Wheel ×4
236 1.9" 輪框
230042

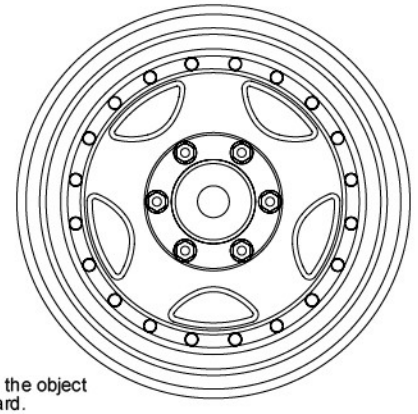

※ Please make the object as the standard.
請以實物為主。

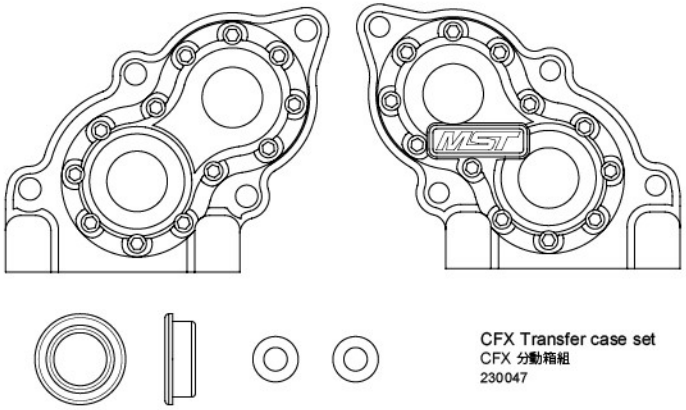

CFX Transfer case set
CFX 分動箱組
230047

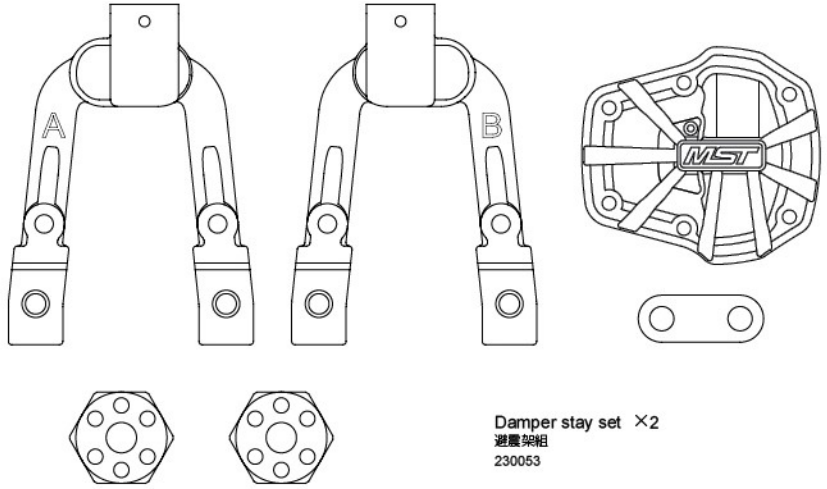

Damper stay set ×2
避震架組
230053



CFX-W Chassis rail ×2
CFX-W 大樑
310093



Inner sponge 38×122×46 ×4
內襯 38×122×46
130047

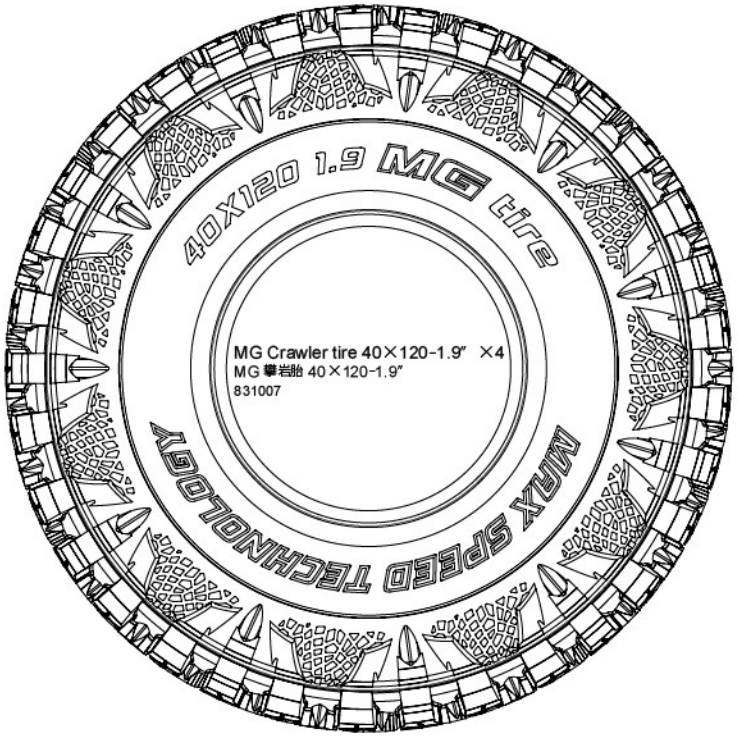

MG Crawler tire 40×120-1.9" ×4
MG 攀岩胎 40×120-1.9"
831007

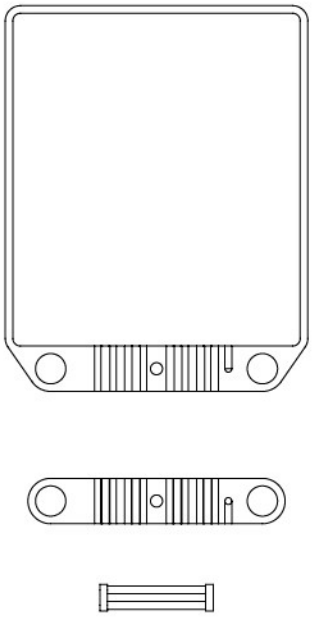

Receiver case seals
防水膠圈組
130051



Receiver case set
接收機盒組
230089

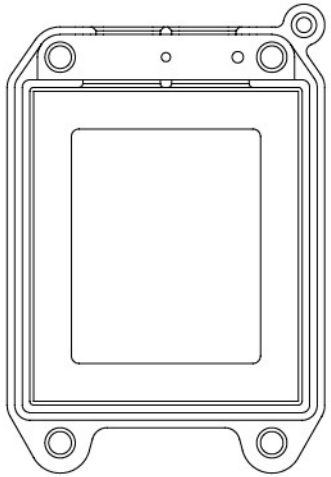

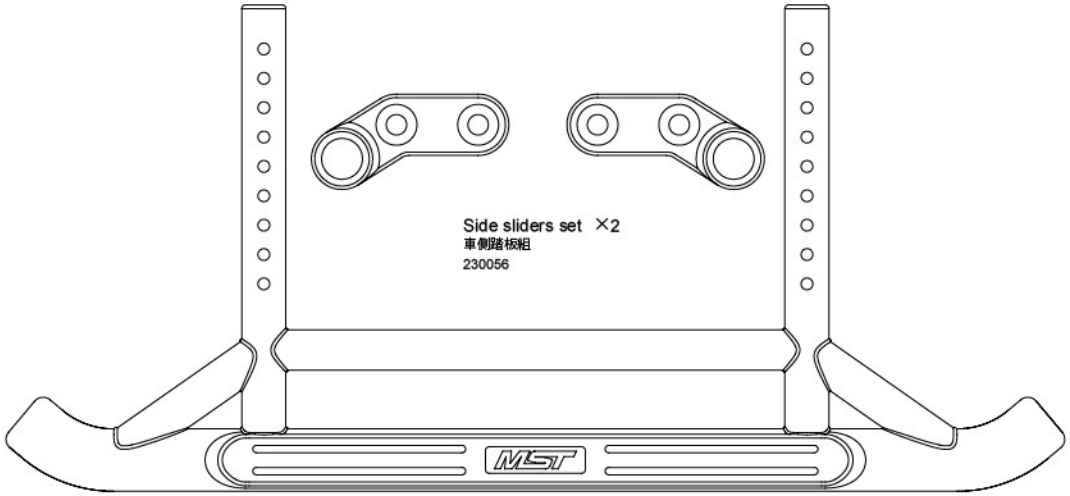

Side sliders set ×2
車側踏板組
230056

PARTS CODE

110001	Round head screw M3×6 (10)	110073	Countersunk screw M3×16 (6)	120019	Ball bearing 8×12 (2)	230048	CFX Driveshaft set	310088	CFX Motor mount
110002	Round head screw M3×8 (10)	110076	Round head screw M3×25 (6)	120020	Ball bearing 5×9×3 (4)	230049	CFX-W Driveshaft	310089	Bulkhead plate
110010	Round head screw M2.5×14 (6)	110081	Countersunk screw M3×14 (6)	120024	Bearing 3×6×2.5 (4)	230050	MPA Axle cover	310090	Gear shaft A
110011	Cap screw M3×6 (6)	110084	Round head screw M2×10 (6)	130028	Damper O-ring P3 (blue) (10)	230051	MPA C hub carrier set	310091	Gear shaft B
110013	E-clip 2.0 (10)	110086	Round head screw M3×16 (6)	130032	Damper cap O-ring (10)	230052	MPA Knuckle set	310092	Gear shaft C
110016	R-clip 6.0 (10)	110087	Round head screw M3×18 (6)	130045	Slipper pad (2)	230053	Damper stay set	310093	CFX-W Chassis rail
110017	Shaft 2×9.8 (10)	110088	Round head screw M3×20 (6)	130046	Velcro strap 16×210mm (2)	230054	Bumper set	310094	MPA CVD Axle (2)
110018	Shaft 2×13.8 (5)	110089	Round head screw M3×30 (6)	130047	Inner sponge 38×122×46 (2)	230055	Rod ends set	310096	MPA Axle (2)
110019	Shaft 2×11.8 (5)	110090	Shaft screw M4×4×12 (6)	130051	Receiver case seals	230056	Side sliders set	310097	Gear 16T
110021	Lock nut M3 (5)	110091	Cap screw M3×40 (6)	210057	Damper cap set	230057	5.8 Rod ends set	310098	Gear C 14T
110023	Set screw M3×16 (6)	110092	King pin screw (4)	210529	Coil spring 45mm (hard)(silver)(2)	230089	Receiver case set	310099	Bevel gear shaft
110026	Round head screw M3×10 (10)	110093	Nut M3 (5)	230015	Damper parts (2)	230122	CFX-W Battery tray set	310100	Bevel gear set 36-15
110027	Cap screw M2×8 (6)	110096	Lock nut M4 (5)	230016	CMX Ball connector set	230123	CFX-W Side plates set	310114	MPA Wheel axle (2)
110029	Round head screw M3×12 (6)	110097	Lock nut M2.5 (5)	230019	CMX Cross member set	230124	CFX-W Bumper set	810023S	Alum. link 43mm (silver) (2)
110031	Shaft 2×10.8 (10)	110098	Shaft 3×11.8 (5)	230020	CMX Gear box chassis set	310072	Piston rod (4)	810026S	Alum. link 60.5mm (silver) (2)
110037	E-clip 4.0 (10)	110104	G-clip 11.0 (10)	230026	CMX Car body post set	310080	Slipper plate (2)	810034S	Alum. link 72.5mm (silver) (2)
110047	Spacer 3×6×0.5 (8)	110105	Cap screw M1.6×10 (10)	230033	CMX Heavy duty locker set	310081	Gear B 14T (4)	810035S	Alum. link 88mm (silver) (2)
110048	Spacer 3×8×0.5 (8)	120001	Ball bearing 10×15 (4)	230042	236 1.9" wheel (+5) (4)	310082	Gear 42T	810036S	Alum. link 96mm (silver) (2)
110049	Round head screw M3×5 (10)	120002	Ball bearing 5×10 (4)	230043	648 1.9" wheel (+5) (4)	310083	Gear 32T	820020	Spacer 5×7×0.3 (8)
110052	Countersunk screw M3×10 (10)	120003	Ball bearing 5×8 (4)	230044	M06 Spur gear 62T	310084	Gear B 24T	820030	Cross joint (2)
110061	Round head screw M3×14 (6)	120013	Ball bearing 4×8×3 (2)	230045	CFX Deceleration gear box set	310085	Gear A 24T	831007	MG Crawler tire 40X120-1.9"
110064	Round head screw M2.5×10 (6)	120017	Bearing 5×8 (4)	230046	CFX Gear box support	310086	Gear A 14T		
110070	E-clip 3.0 (10)	120018	Ball bearing 4×10×4 (2)	230047	CFX Transfer case set	310087	Slipper shaft set		

部品編號

110001	六角半圓頭螺絲 M3×6 (10)	110073	六角沉頭螺絲 M3×16 (6)	120019	培林 8×12 (2)	230048	CFX 驅動軸組	310088	CFX 馬達座
110002	六角半圓頭螺絲 M3×8 (10)	110076	六角半圓頭螺絲 M3×25 (6)	120020	培林 5×9×3 (4)	230049	CFX-W 傳動軸	310089	減速箱艙板
110010	六角半圓頭螺絲 M2.5×14 (6)	110081	六角沉頭螺絲 M3×14 (6)	120024	軸承 3×6×2.5 (4)	230050	MPA 車軸殼	310090	齒輪軸心 A
110011	六角有頭螺絲 M3×6 (半牙) (6)	110084	六角半圓頭螺絲 M2×10 (6)	130028	阻尼器O環 P3 (藍) (10)	230051	MPA 轉向C座組	310091	齒輪軸心 B
110013	E扣 2.0 (10)	110086	六角半圓頭螺絲 M3×16 (6)	130032	避震上蓋O環 (10)	230052	MPA 轉向座組	310092	齒輪軸心 C
110016	R銷 6.0 (10)	110087	六角半圓頭螺絲 M3×18 (6)	130045	扭限摩擦片 (2)	230053	避震架組	310093	CFX-W 大樑 (2)
110017	插銷 2×9.8 (10)	110088	六角半圓頭螺絲 M3×20 (6)	130046	電池束帶 16×210mm (2)	230054	前保桿組	310094	MPA CVD 輪軸 (2)
110018	插銷 2×13.8 (5)	110089	六角半圓頭螺絲 M3×30 (6)	130047	內襯 38×122×46 (2)	230055	拉桿頭組	310096	MPA 輪軸 (2)
110019	插銷 2×11.8 (5)	110090	鎖釘螺絲 M4×4×12 (6)	130051	防水膠圈組	230056	車側踏板組	310097	齒輪 16T
110021	防鬆螺帽 M3 (5)	110091	六角有頭螺絲 M3×40 (半牙) (6)	210057	避震器上下蓋組	230057	5.8 拉桿頭組	310098	齒輪 C 14T
110023	六角止付螺絲 M3×16 (6)	110092	大王螺絲 (4)	210529	避震彈簧 45mm (硬)(銀)(2)	230089	接收機盒組	310099	傘齒軸
110026	六角半圓頭螺絲 M3×10 (10)	110093	螺帽 M3 (5)	230015	避震膠件組 (2)	230122	CFX-W 電池盒組	310100	傘齒組 36-15
110027	六角有頭螺絲 M2×8 (6)	110096	防鬆螺帽 M4 (5)	230016	CMX 球頭組	230123	CFX-W 電裝托盤組	310114	MPA 萬向接杯 (2)
110029	六角半圓頭螺絲 M3×12 (6)	110097	防鬆螺帽 M2.5 (5)	230019	CMX 橫樑組	230124	CFX-W 保桿組	810023S	鋁合金拉桿 43mm (銀) (2)
110031	插銷 2×10.8 (10)	110098	插銷 3×11.8 (5)	230020	CMX 減速箱底盤組	310072	避震軸心 (4)	810026S	鋁合金拉桿 60.5mm (銀) (2)
110037	E扣 4.0 (10)	110104	G扣 11.0 (10)	230026	CMX 車殼支柱組	310080	扭限壓盤	810034S	鋁合金拉桿 72.5mm (銀) (2)
110047	墊片 3×6×0.5 (8)	110105	六角有頭螺絲 M1.6×10 (10)	230033	CMX 直軸連接座組	310081	齒輪 B 14T (4)	810035S	鋁合金拉桿 88mm (銀) (2)
110048	墊片 3×8×0.5 (8)	120001	培林 10×15 (4)	230042	236 1.9" 輪框 (+5) (4)	310082	齒輪 42T	810036S	鋁合金拉桿 96mm (銀) (2)
110049	六角半圓頭螺絲 M3×5 (10)	120002	培林 5×10 (4)	230043	648 1.9" 輪框 (+5) (4)	310083	齒輪 32T	820020	墊片 5×7×0.3 (8)
110052	六角沉頭螺絲 M3×10 (10)	120003	培林 5×8 (4)	230044	M06 大齒盤 62T	310084	齒輪 B 24T	820030	連接軸 (2)
110061	六角半圓頭螺絲 M3×14 (6)	120013	培林 4×8×3 (2)	230045	CFX 減速箱組	310085	齒輪 A 24T	831007	MG 攀岩胎 40X120-1.9"
110064	六角圓頭螺絲 M2.5×10 (6)	120017	軸承 5×8 (4)	230046	CFX 減速箱支架組	310086	齒輪 A 14T		
110070	E扣 3.0 (10)	120018	培林 4×10×4 (2)	230047	CFX 分動箱組	310087	扭限軸心組		

MST

max SPEED TECHNOLOGY

CFX-W OFF ROAD

4WD HIGH PERFORMANCE OFF ROAD CAR

READY-TO-RUN RTR

EXPLODED MANUAL

WWW.RC-MST.COM

[facebook.com/MST.tw]

Max Speed Technology

PRINTED WITH SOY INK

026209