CFX-MS

OFF ROAD

MST
max SPEED TECHNOLOGY

RC 4WD HIGH PERFORMANCE OFF ROAD CAR

MST OWNERS CLUB
ADVENTURES
OFF-ROAD
MST

ASSEMBLY KIT

4X4
OFF ROAD



INSTRUCTION MANUAL

CREEK | MUD | FOREST | ROCKY | SNOW | SAND

WHEELBASE : 313mm
WIDTH : 224mm
GEAR RATIO = 1:31.7~1:46.7
TIRE WIDTH / DIAMETER : 30×105mm
Shaft-Driven Full-Time 4WD
Front and Rear SA25 Axle

WWW.RC-MST.COM

※SPECIFICATION ARE SUBJECT TO CHANGE WITHOUT NOTICE

Necessary tools and accessories for [CFX-WS] assembly
CFX-WS 需求工具及配件

MST max speed technology

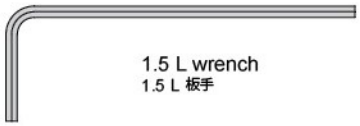

1.5 L wrench
1.5 L 板手

1.5 Hex



5.5×4.0 Wrench
5.5×4.0 板手



2.0 L wrench
2.0 L 板手

2.0 Hex



O-ring P3 ×4
O環



R-clip ×9
R形扣

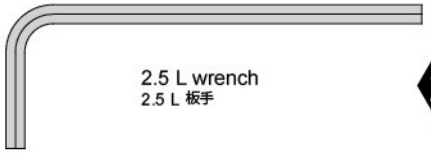

2.5 L wrench
2.5 L 板手

2.5 Hex

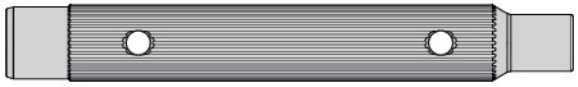

5.5 7.0

5.5 & 7.0 alum. wrench
5.5 & 7.0 套筒板手

EVA double sided tape
EVA 雙面膠

20×80 Sponge tape
泡棉膠

158×12 Sponge tape
泡棉膠

NECESSARY TOOLS FOR ASSEMBLY 工具需求
〔NOT INCLUDED IN KIT〕 [另購]



Hobby knife
美工刀

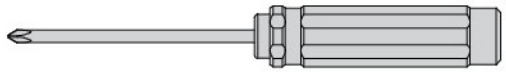

Screwdriver
螺絲起子

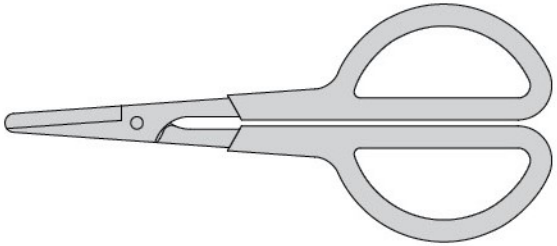

Scissors
剪刀

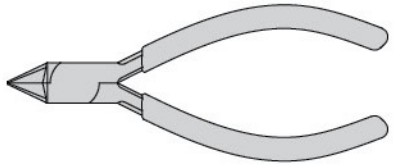

Side cutter
斜口鉗

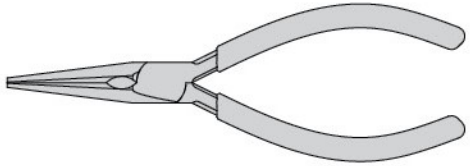

Needle nose pliers
尖嘴鉗

Please follow the assembling figures and instructions closely for your [CFX-WS] best performance!
請依照說明書圖示步驟安裝以發揮 [CFX-WS] 最好效能！

PARTS



M2×6 screw ×12
圓頭螺絲
110044



M2×10 screw ×9
圓頭螺絲
110084



M2×12 screw ×8
圓頭螺絲
110111



M2×16 screw ×4
圓頭螺絲
110085



M2.5×14 screw ×1
圓頭螺絲
110010



M3×5 screw ×1
圓頭螺絲
110049



M3×6 screw ×10
圓頭螺絲
110001



M3×8 screw ×16
圓頭螺絲
110002



M3×10 screw ×17
圓頭螺絲
110026



M3×14 screw ×9
圓頭螺絲
110061



M3×16 screw ×6
圓頭螺絲
110086



M3×18 screw ×8
圓頭螺絲
110087



M3×20 screw ×5
圓頭螺絲
110088



M3×30 screw ×2
圓頭螺絲
110089



M3×14 screw ×4
沉頭螺絲
110081



M3×6 Cap screw ×2
有頭螺絲
110011



M3×40 Cap screw ×2
有頭螺絲
110091

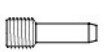

Shaft screw ×4
銷釘螺絲
110090

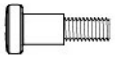

King pin screw ×4
大王螺絲
110092



M3×3 screw ×1
止付螺絲
110035



M3×16 screw ×20
止付螺絲
110023



2×9.8 Shaft ×7
插銷
110017



2×10.8 Shaft ×2
插銷
110031



2×11.8 Shaft ×2
插銷
110019



2×13.8 Shaft ×1
插銷
110018



3×6×0.5 Spacer ×13
墊片
110047



3×8×0.5 Spacer ×1
墊片
110048



5×7×0.3 Spacer ×3
墊片
820020

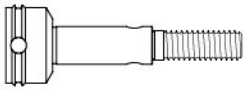

Wheel axle ×2
萬向接杯
310108

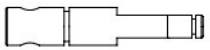

Bevel gear shaft ×2
小傘齒軸
310099

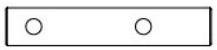

Gear Shaft B ×1
齒輪軸心 B
310091



Gear Shaft A ×1
齒輪軸心 A
310090

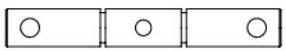

Gear Shaft C ×1
齒輪軸心 C
310092

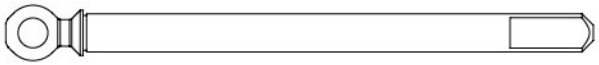

SA25 CVA axle ×2
SA25 CVA 輪軸
310120



SA25 Rear axle ×2
SA25 後傳動軸
310121

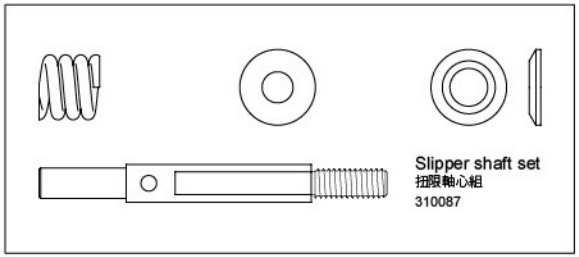

Slipper shaft set
扭限軸心組
310087



R-clip ×9
R形扣
110016



G-clip 11.0 ×2
G扣
110104



Lock nut M3 ×21
防鬆螺帽
110021



Lock nut M4 ×5
防鬆螺帽
110096

Gear B 14T ×4
齒輪 B 14T
310081

Gear B 24T ×2
齒輪 B 24T
310084

Gear 32T ×1
齒輪 32T
310083

8×10×0.3 Spacer ×2
墊片
820078

5×8×2.5 Bearing ×1
軸承
120017

4×10×4 Ball bearing ×1
培林
120018

5×8×2.5 Ball bearing ×1
培林
120003

5×10×4 Ball bearing ×17
培林
120002

8×12×3.5 Ball bearing ×6
培林
120019

10×15×4 Ball bearing ×1
培林
120001

E-clip 2.0 ×12
E扣
110013

E-clip 3.0 ×4
E扣
110070

E-clip 4.0 ×5
E扣
110037

Gear A 14T ×1
齒輪 A 14T
310086

Gear A 24T ×1
齒輪 A 24T
310085

PARTS



6×1 O-ring ×4
O環
130053



Damper O-ring P3 ×8
避震器O環
130028

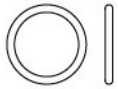

8.5×1 O-ring ×4
O環
130052



Piston rod ×4
避震軸心
310072



TC70 Alum. damper set (black) (4)
TC70 鋁合金避震器組（黑）(4)
820116BK

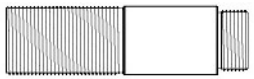

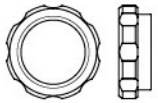

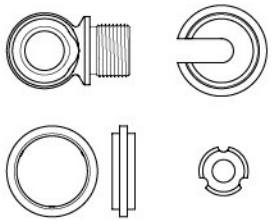

Damper plastic maintenance set (2)
避震膠件組 (2)
820116-1

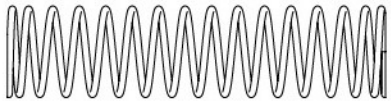

50mm TC coil spring set ×4
50mm TC 避震彈簧組
820146

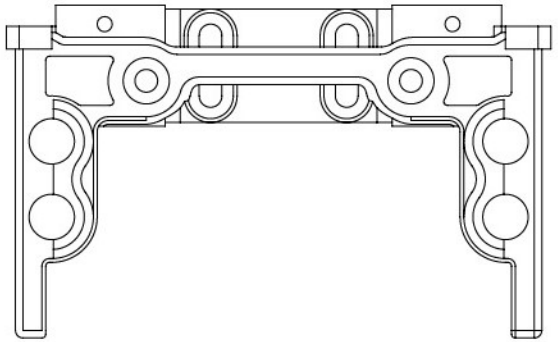

Crossmember & SA25 Differential cover set ×2
橫樑 & 車軸蓋組
230136





CFX-W Battery tray set
CFX-W 電池盒組
230122

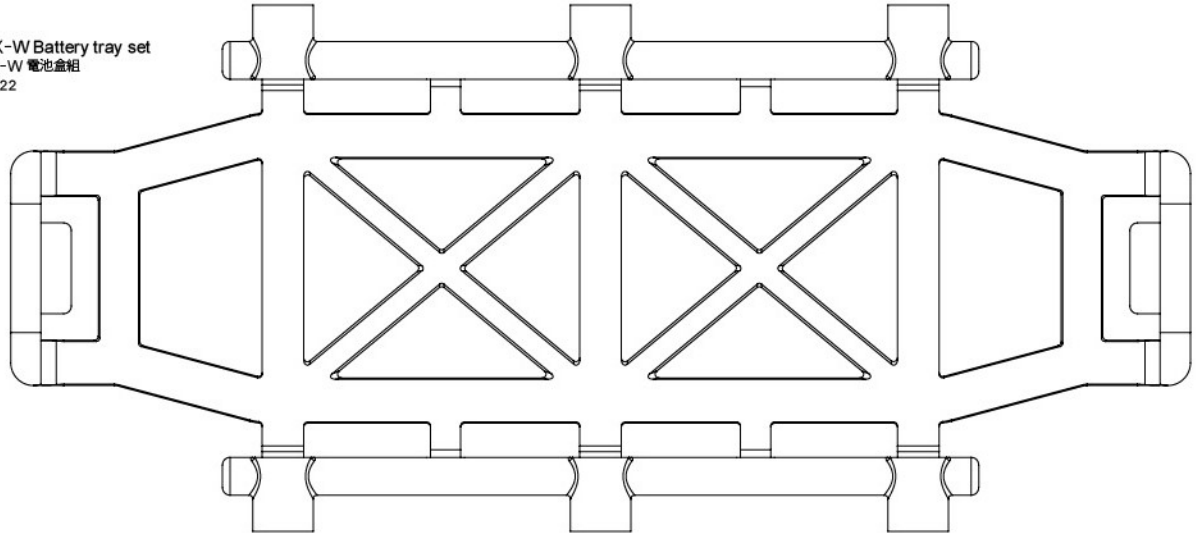

5.8 Rod ends set ×4
5.8 拉桿頭組
230057

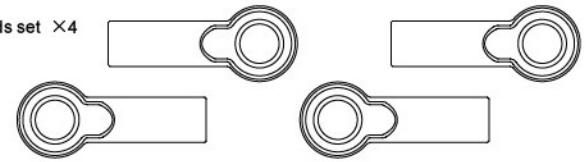

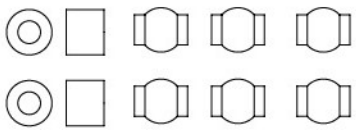

CMX Ball connector set ×5
CMX 球頭組
230016



Servo horn set (23T/25T)
伺服機舵片組 (23T/25T)
210032

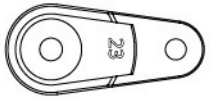

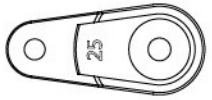

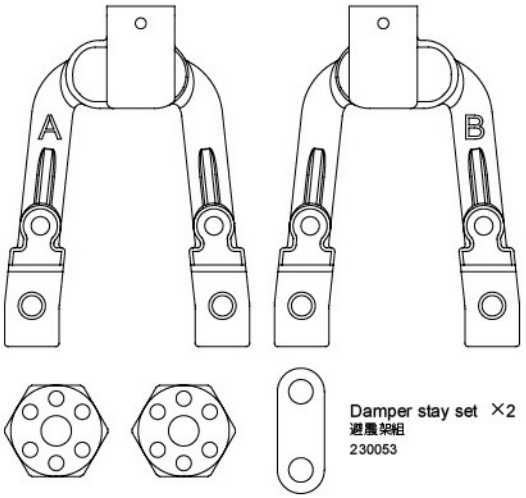

Damper stay set ×2
避震架組
230053

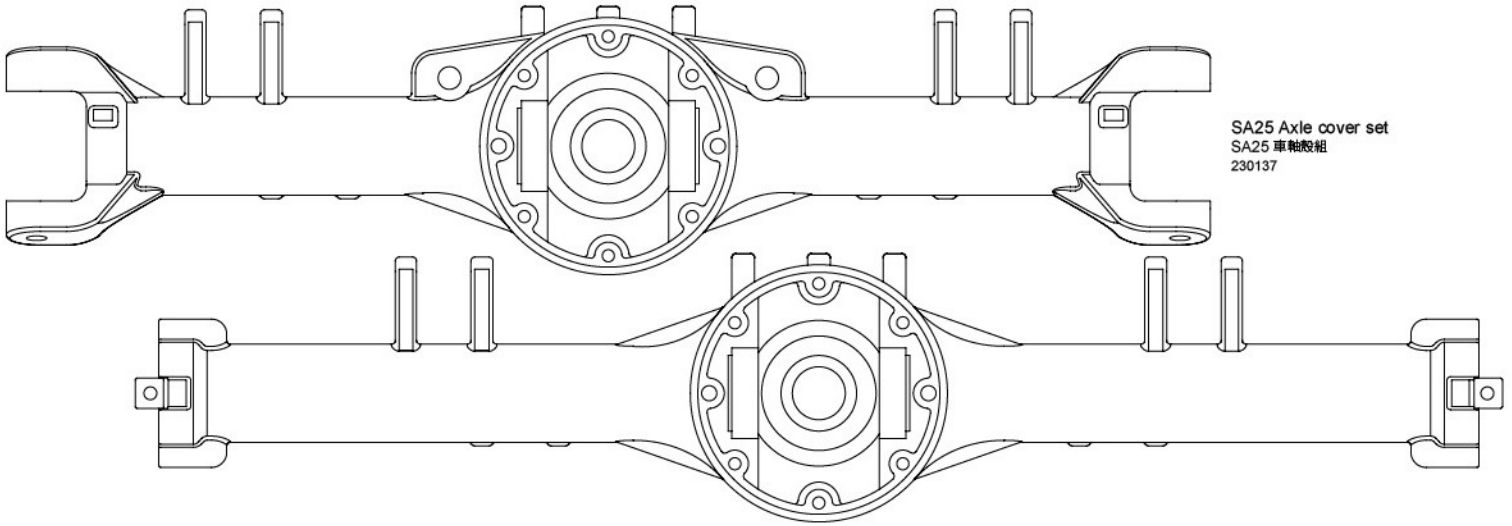

SA25 Axle cover set
SA25 車軸殼組
230137

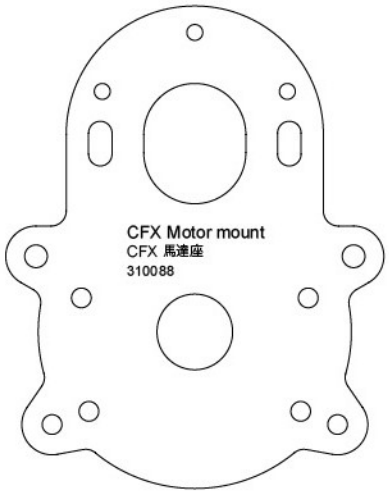

CFX Motor mount
CFX 馬達座
310088

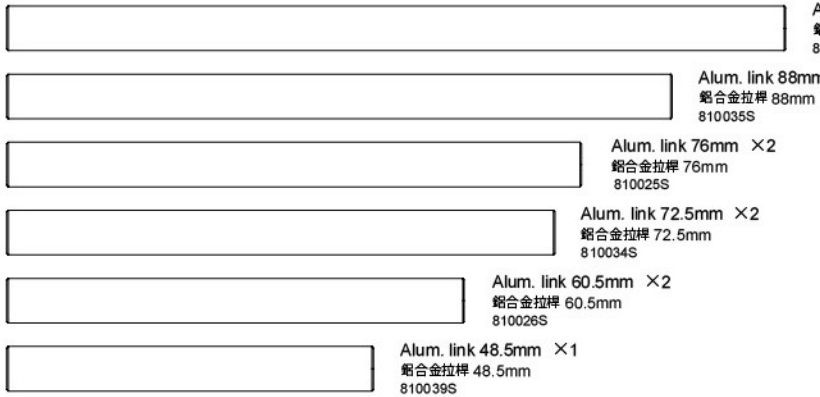

Alum. link 103mm ×1
鋁合金拉桿 103mm
810038S

Alum. link 88mm ×2
鋁合金拉桿 88mm
810035S

Alum. link 76mm ×2
鋁合金拉桿 76mm
810025S

Alum. link 72.5mm ×2
鋁合金拉桿 72.5mm
810034S

Alum. link 60.5mm ×2
鋁合金拉桿 60.5mm
810026S

Alum. link 48.5mm ×1
鋁合金拉桿 48.5mm
810039S



CFX Driveshaft set
CFX 驅動軸組
230048

M06 Spur gear 62T
M06 大齒盤 62T
230044

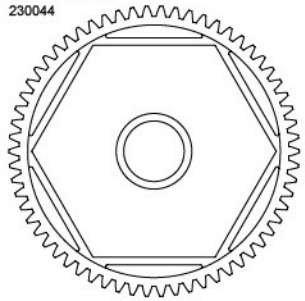

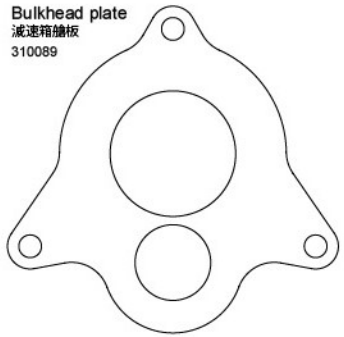

Bulkhead plate
減速箱艙板
310089

Gear 42T
齒輪 42T
310082



CMX Car body post set ×2
CMX 車殼支柱組
230026

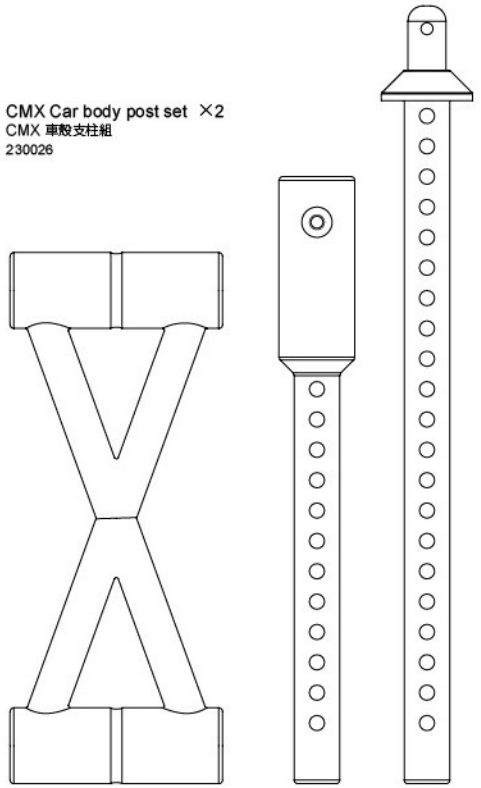

PARTS

CMX Knuckle set ×1
CMX 轉向座組
230025

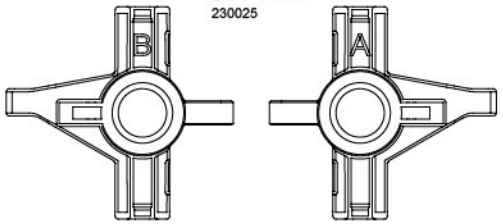

Slipper Pad ×2
扭限摩擦片
130045

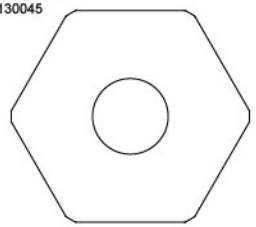

Slipper Plate ×2
扭限壓盤
310080

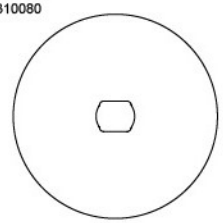

648 1.9" Crawler wheel ×4
648 1.9" 攀岩框
230043

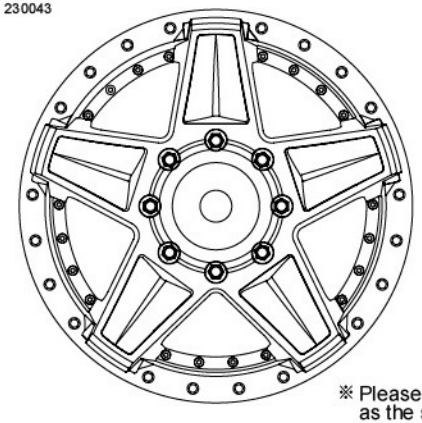

236 1.9" Crawler wheel ×4
236 1.9" 攀岩框
832071BK

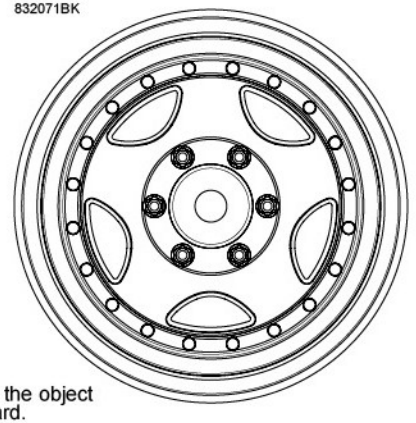

※ Please make the object as the standard.
請以實物為主。

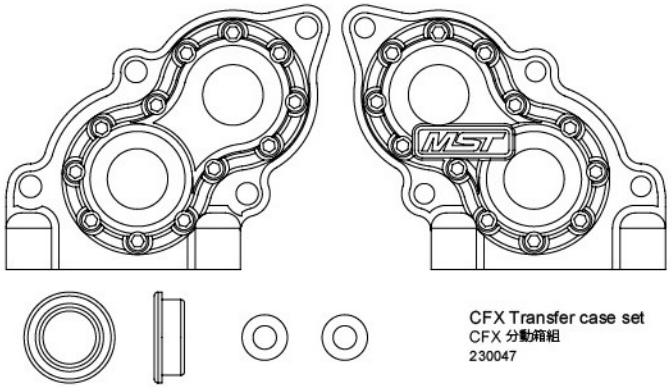

CFX Transfer case set
CFX 分動箱組
230047



CFX Deceleration gear box set
CFX 減速箱組
230045

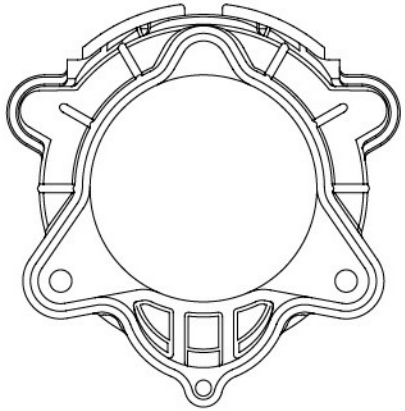



Velcro strap 16×210mm
電池束帶
130046

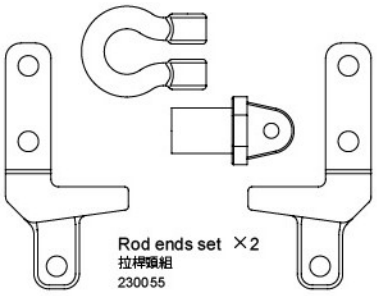

Rod ends set ×2
拉桿頭組
230055

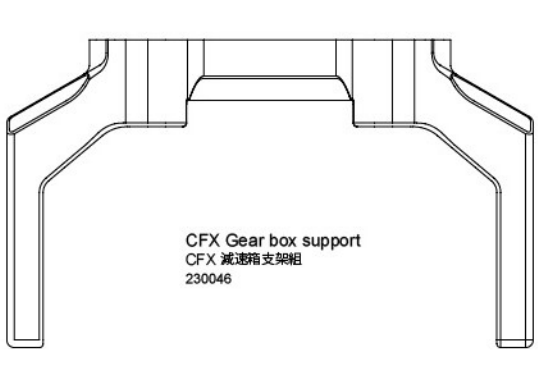

CFX Gear box support
CFX 減速箱支架組
230046

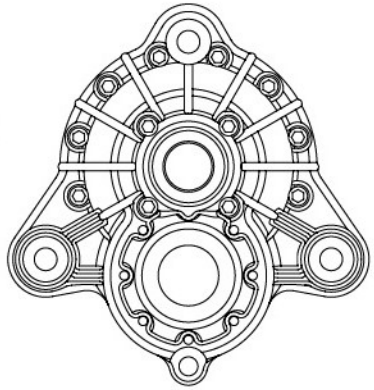



CFX-W Chassis rail ×2
CFX-W 大樑
310093



Inner sponge 30×105×50 ×4
內襯 30×105×50
130058

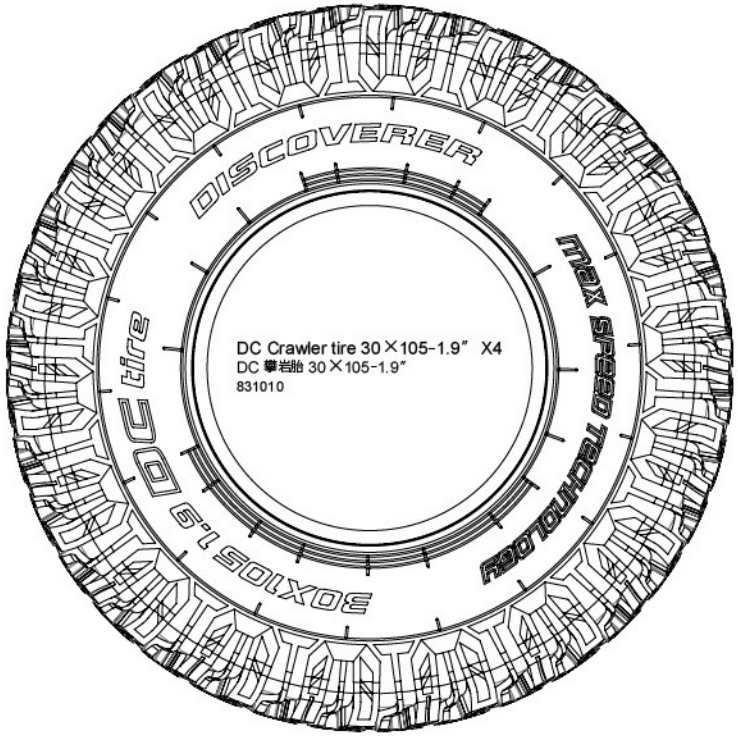

DC Crawler tire 30×105-1.9" X4
DC 攀岩胎 30×105-1.9"
831010

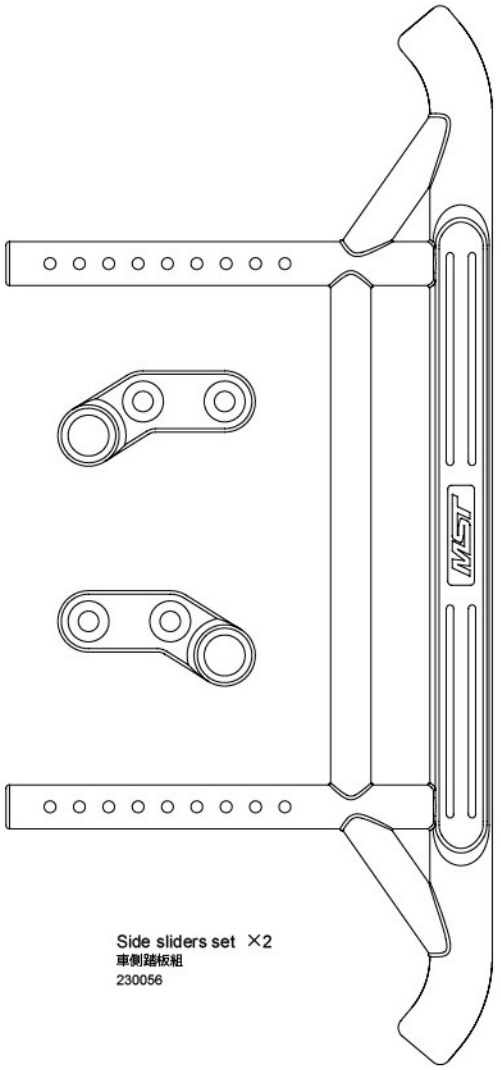

Side sliders set ×2
車側踏板組
230056

CMX Gear box chassis set
CMX 減速箱底盤組
230020

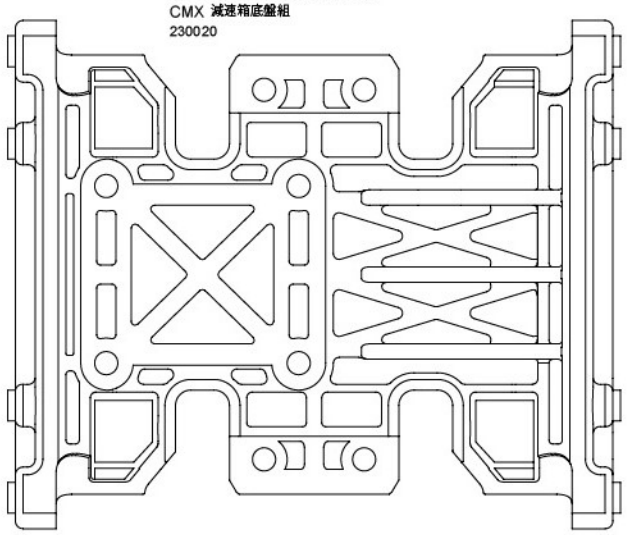

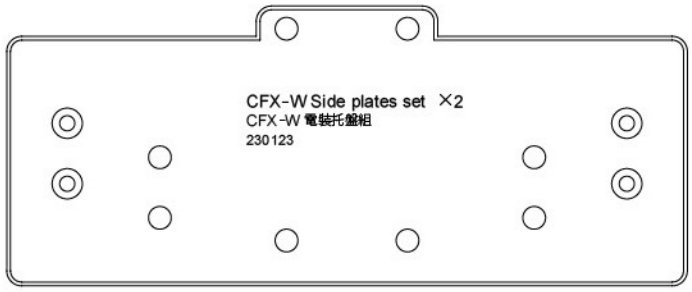

CFX-W Side plates set ×2
CFX-W 電裝托盤組
230123

CFX-W Driveshaft ×2
CFX-W 傳動軸
230049

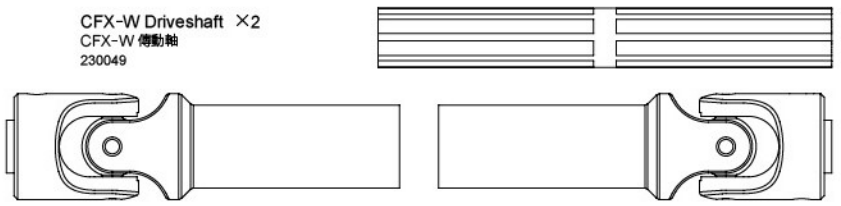

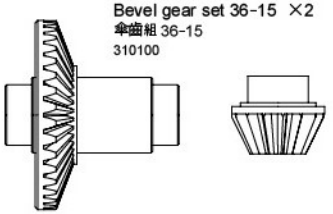

Bevel gear set 36-15 ×2
傘齒組 36-15
310100

PARTS BAG 1, 2, 3 1

TRANSMISSION
減速箱


M2.5×10 screw ×3
圓頭螺絲


M2.5×14 screw ×1
圓頭螺絲


M3×10 screw ×6
圓頭螺絲


M3×16 screw ×1
圓頭螺絲


M3×6 cap screw ×2
有頭螺絲

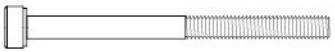
M3×40 cap screw ×2
有頭螺絲


5×8×2.5 Bearing ×1
軸承


5×8×2.5 Ball bearing ×1
培林


4×10×4 Ball bearing ×1
培林


5×10×4 Ball bearing ×3
培林


10×15×4 Ball bearing ×1
培林

2×9.8 Shaft ×2
插銷


Gear shaft A ×1
齒輪軸心 A


Main shaft ×1
主齒軸


3×6×0.5 Spacer ×2
墊片


5×7×0.3 Spacer ×1
墊片


4×10×1 Spacer ×1
墊片


Slipper spacer ×1
扭限墊片


E-clip 4.0 ×1
E扣


Bearing holder ×1
軸承套


Lock nut M4 ×1
防鬆螺帽


Spring ×1
扭限彈簧


Gear B 14T ×4
齒輪 B 14T

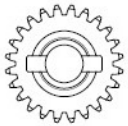
Gear B 24T ×1
齒輪 B 24T

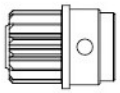
Gear A 14T ×1
齒輪 A 14T

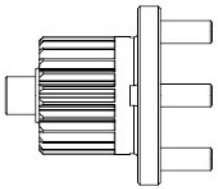
Gear A 24T ×1
齒輪 A 24T

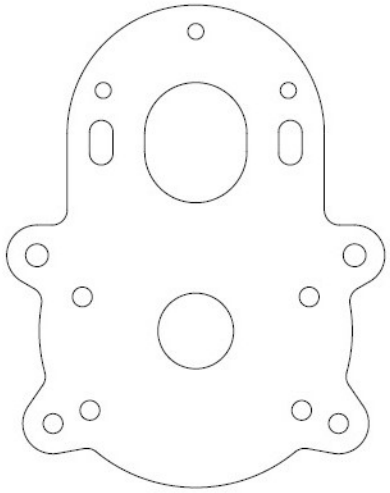
Motor mount ×1
馬達座

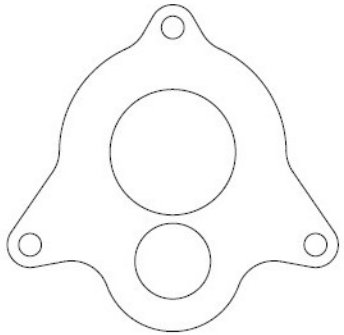
Bulkhead plate ×1
減速箱艙板

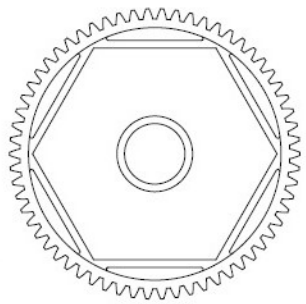
M06 Spur gear 62T ×1
M06 大齒盤 62T

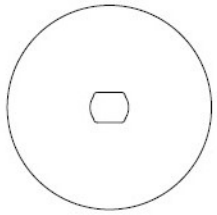
Slipper plate ×2
扭限壓盤

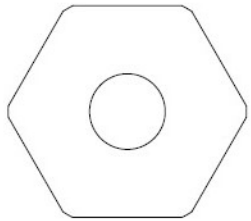
Slipper pad ×2
扭限摩擦片

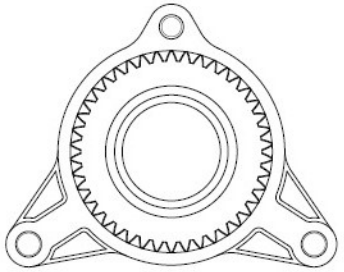
Gear 42T ×1
齒輪 42T


Gearbox mount ×1
減速齒箱固定座

Gearbox A ×1
減速齒箱 A

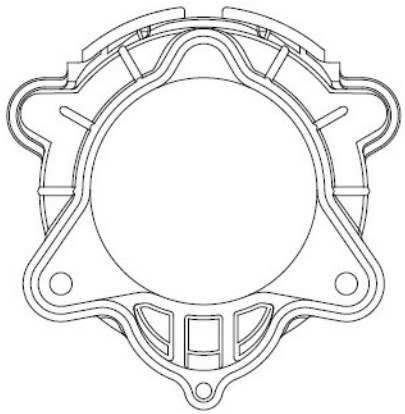
Gearbox B ×1
減速齒箱 B

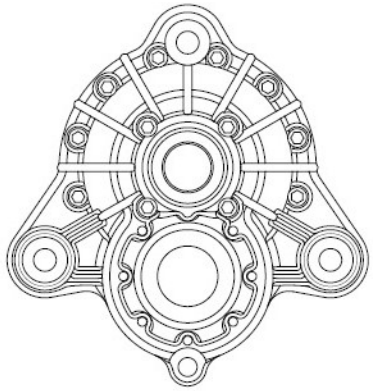
Gearbox C ×1
減速齒箱 C

STEP 1 Deceleration gear assembly
減速齒組裝

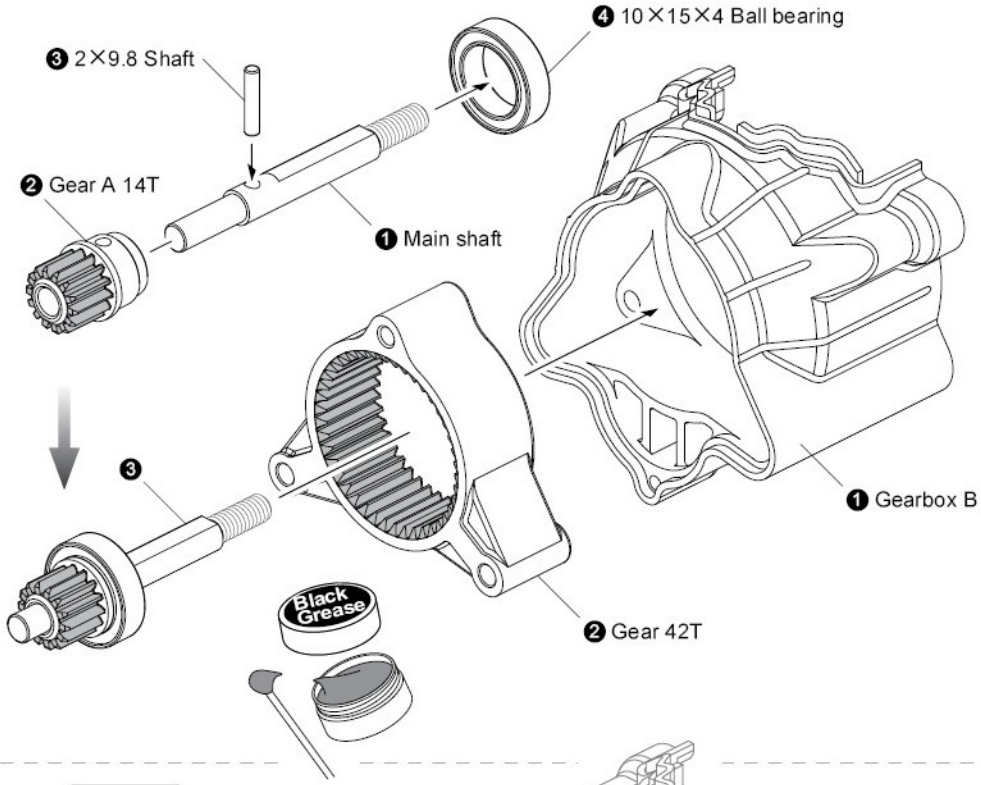

STEP 2 Deceleration gear assembly
減速齒組裝

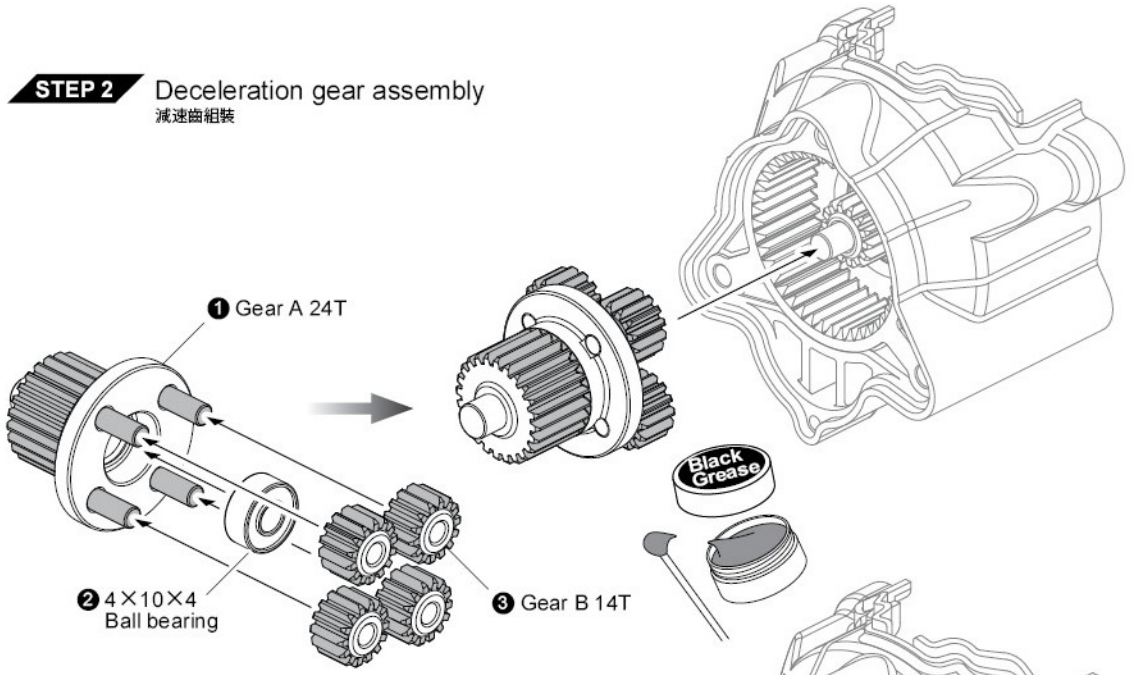

STEP 3 Attaching bulkhead plate
安裝減速箱艙板

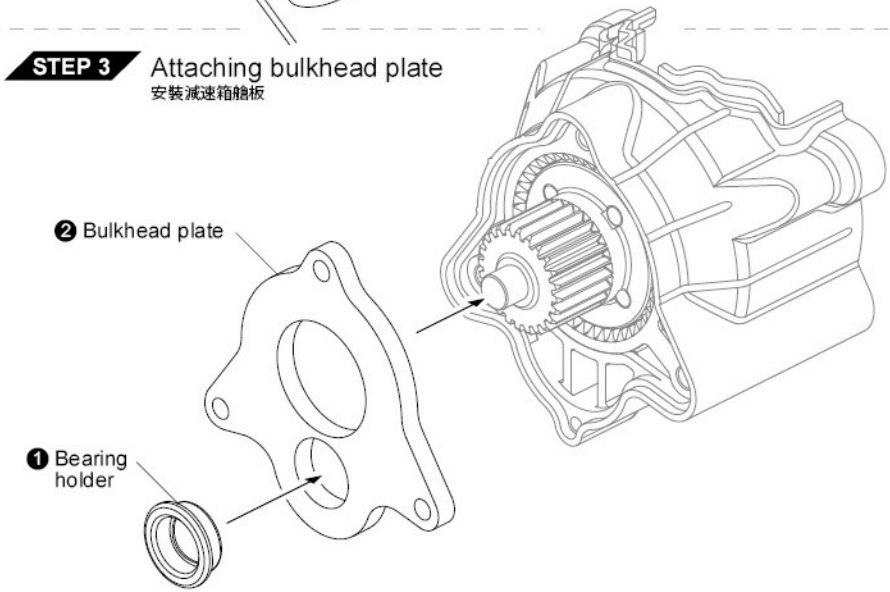

STEP 4 Deceleration gear assembly
減速齒組裝

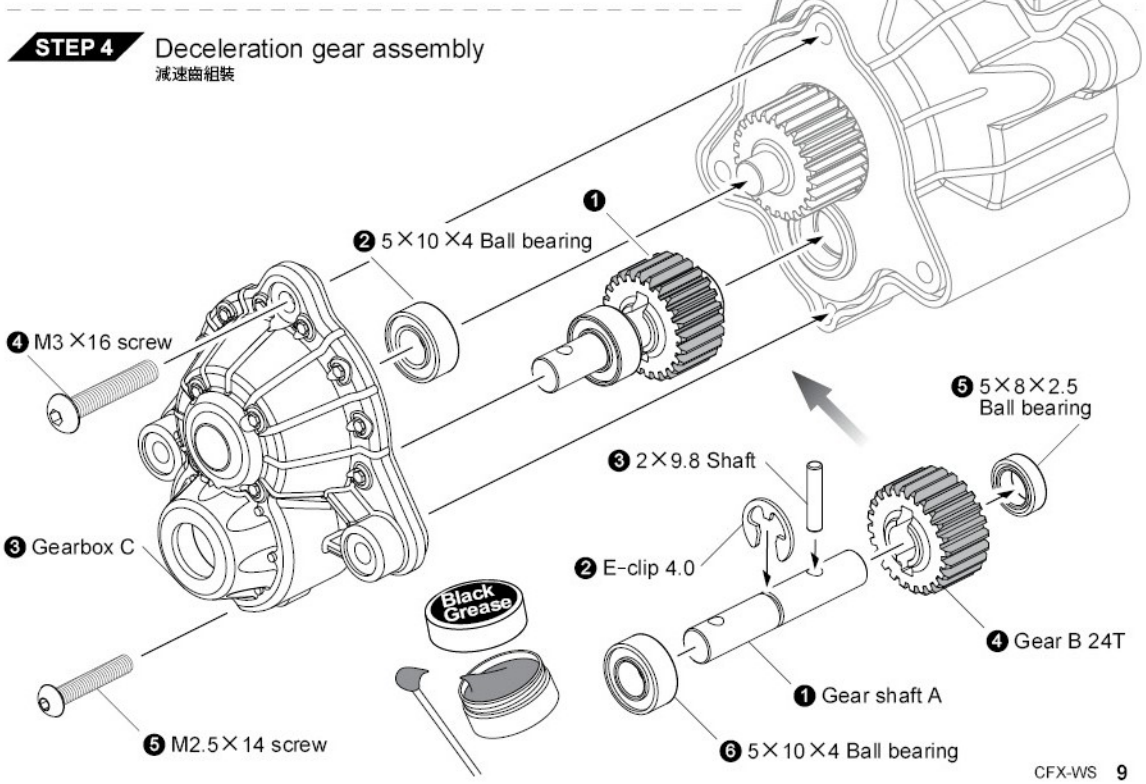

TRANSMISSION
減速箱

STEP 5 Attaching spur gear
安裝大齒盤

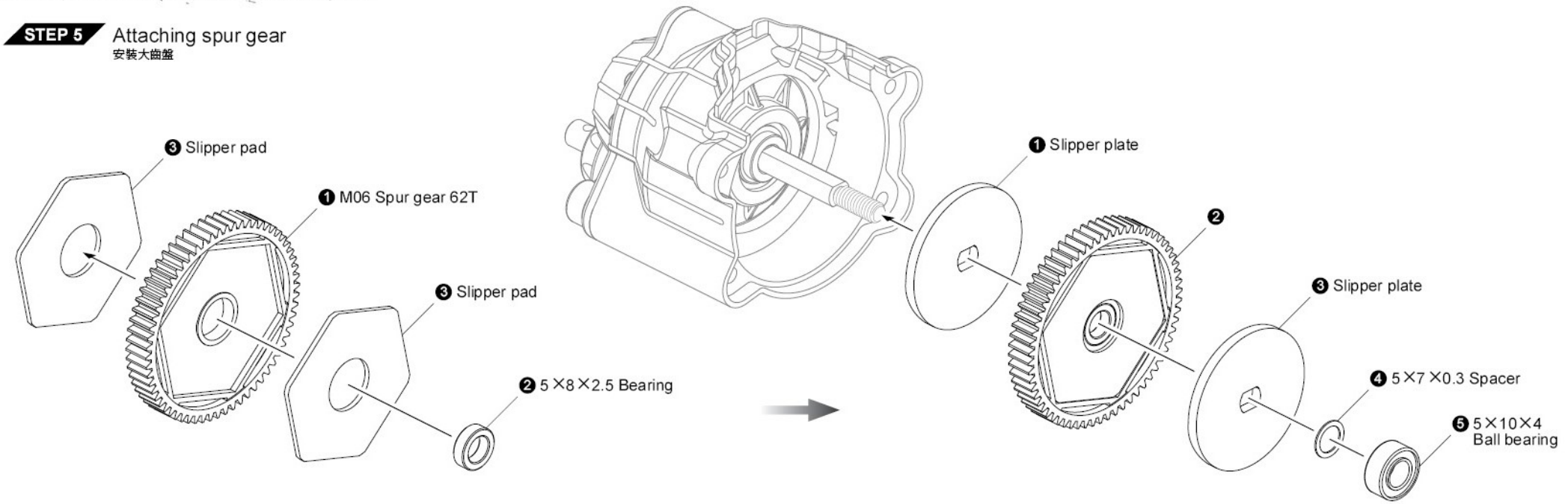

STEP 6 Attaching motor mount
安裝馬達座

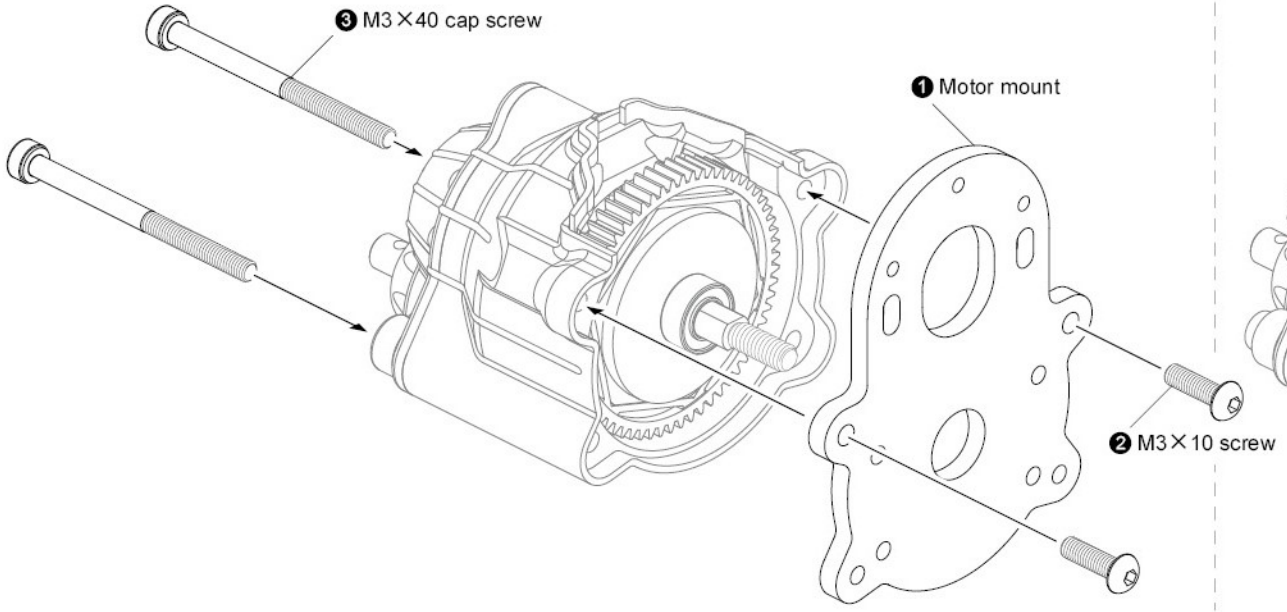

STEP 7 Attaching spring
安裝扭限彈簧

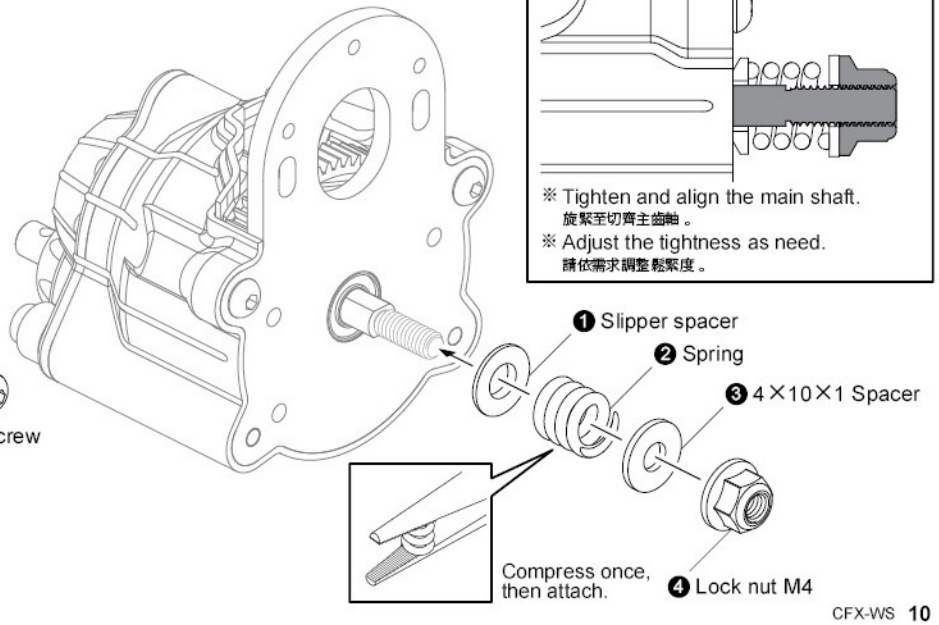

❗ Please note the overtightening slipper clutch may cause the drivertrain broken.
請注意如過度旋緊，將會使傳動件毀損。

※ Tighten and align the main shaft.
旋緊至切齊主齒軸。
※ Adjust the tightness as need.
請依需求調整鬆緊度。

STEP 8 Attaching pinion gear
安裝馬達齒

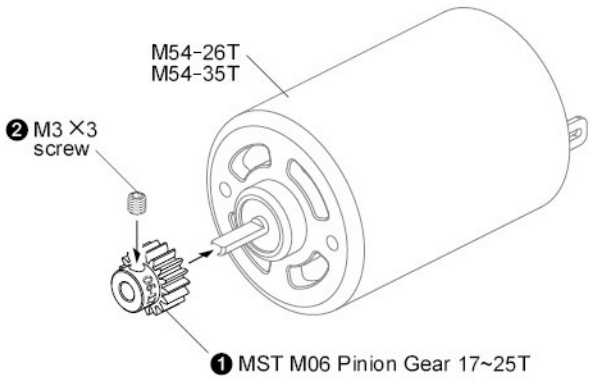

GEAR RATIO	
Pinion Gear	Spur Gear 62T
17	46.68
18	44.09
19	41.77
20	39.69
21	37.79
22	36.07
23	34.50
24	33.06
25	31.74

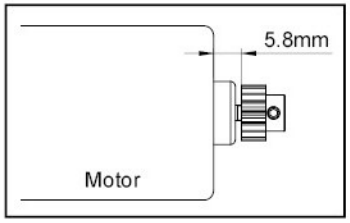

※ Please set the gear ratio according to motor specifications, environments, and personal requirements.
齒比的選擇會因馬達規格、場地形態、車手手感，而有不同選擇。可先參考當地配置後再選擇齒比！

※ Please refer to MST office website for completed pinion specifications.
如須另購馬達齒，請上官網查詢！**[www.rc-mst.com]**

STEP 9 Attaching motor
安裝馬達

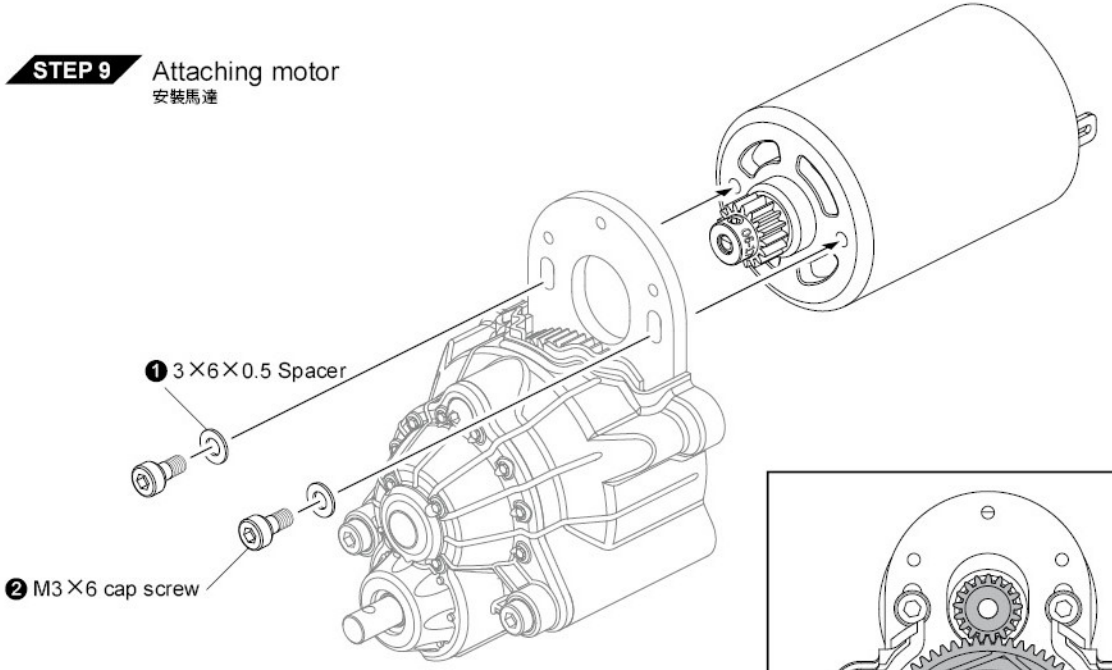

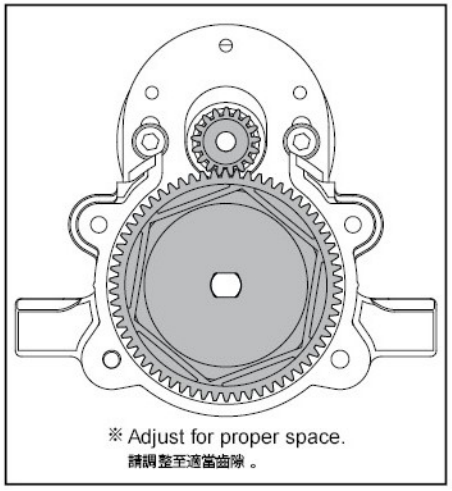

STEP 10 Attaching dust cover
安裝防塵蓋

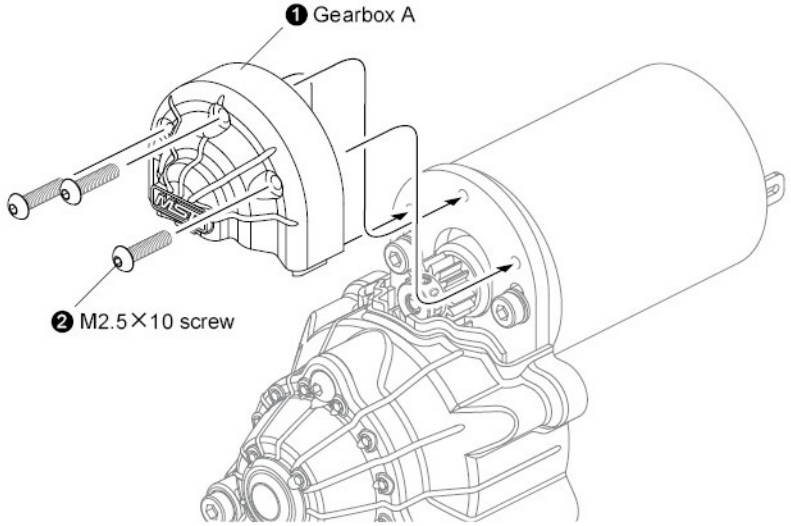

STEP 11 Attaching gearbox mount
安裝減速箱固定座

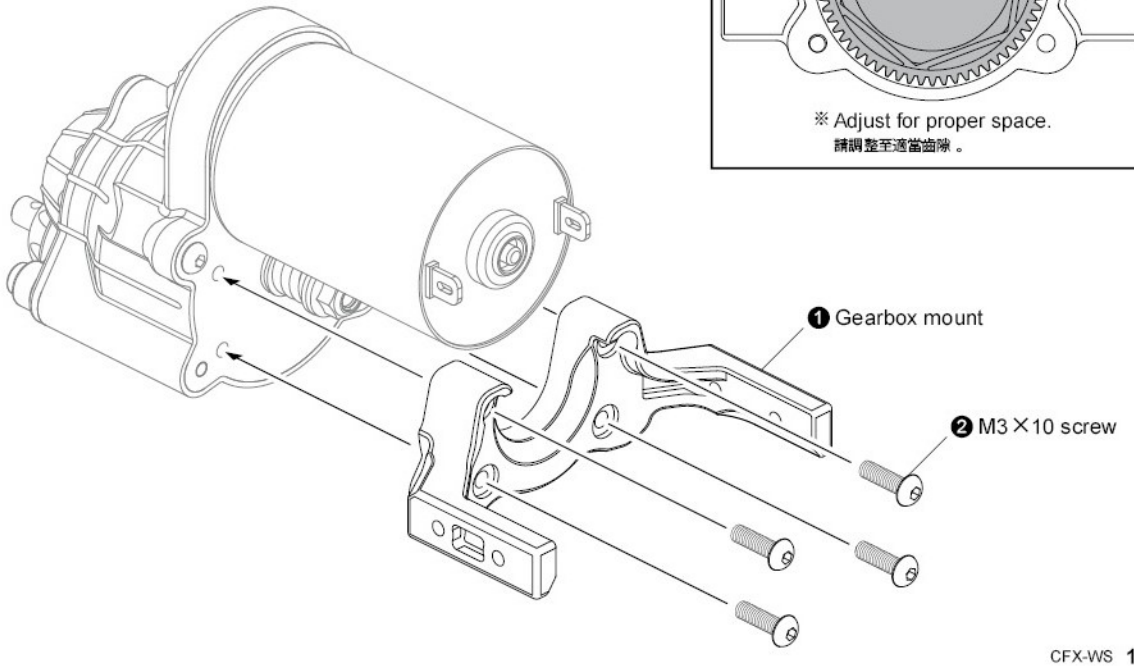

TRANSFER CASE
分動箱


M3×5 screw ×1
圓頭螺絲


M3×14 screw ×4
圓頭螺絲


2×9.8 Shaft ×1
插銷


2×13.8 Shaft ×1
插銷


3×6×0.5 Spacer ×1
墊片


5×10×4 Ball bearing ×4
培林


Gear shaft B ×1
齒輪軸心 B


Gear shaft C ×1
齒輪軸心 C


E-clip 4.0 ×2
E扣

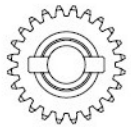
Gear B 24T ×1
齒輪 B 24T

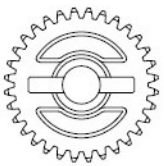
Gear 32T ×1
齒輪 32T

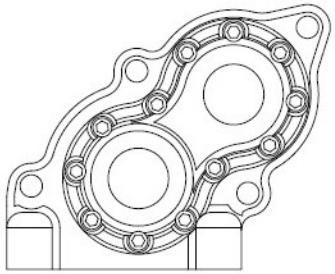
Gear box A ×1
分動箱 A

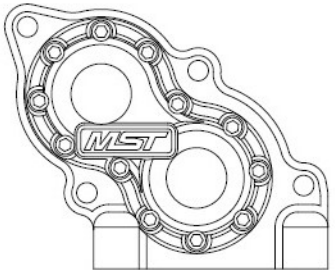

Gear box B ×1
分動箱 B

STEP 1 Deceleration gear assembly
減速齒組裝

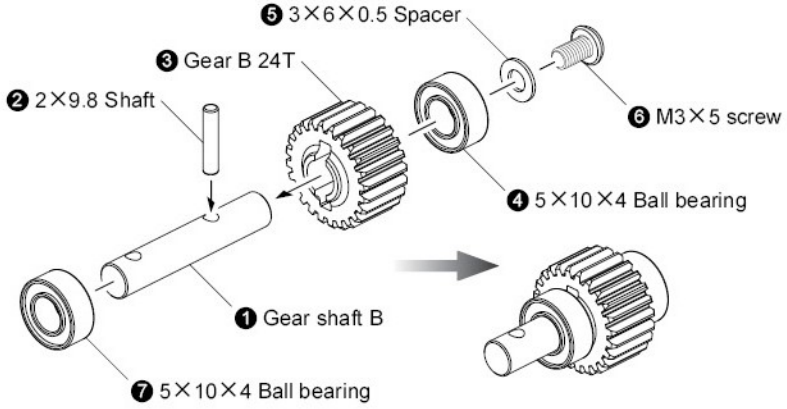

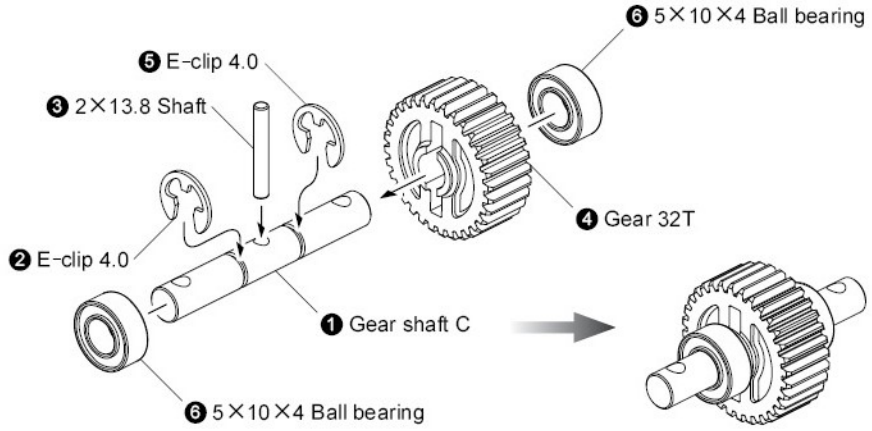

STEP 2 Attaching gear
安裝減速齒

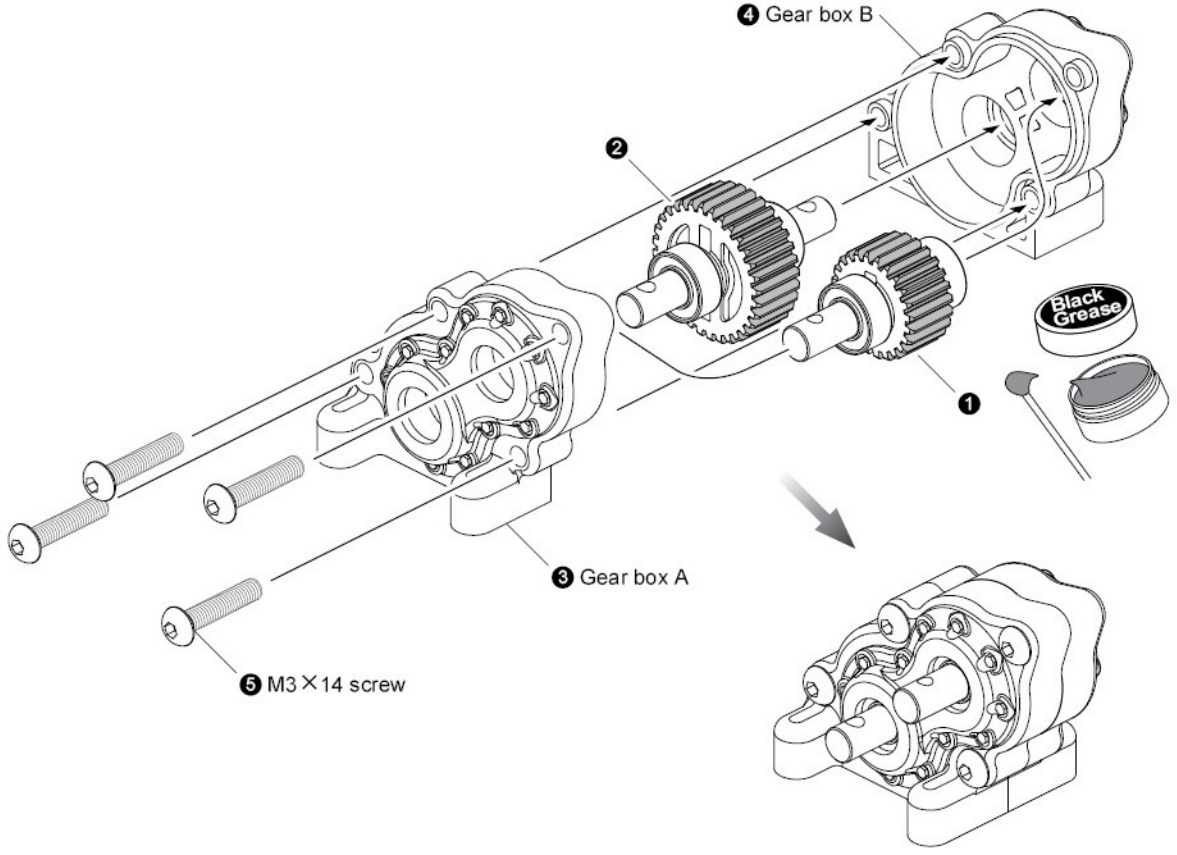

FRAME RAIL
車架


M3×6 screw ×4
圓頭螺絲


M3×8 screw ×16
圓頭螺絲


M3×10 screw ×4
圓頭螺絲


M3×14 screw ×4
沉頭螺絲


2×11.8 Shaft ×2
插銷


Lock nut M3 ×4
防鬆螺帽


Driveshaft
傳動軸

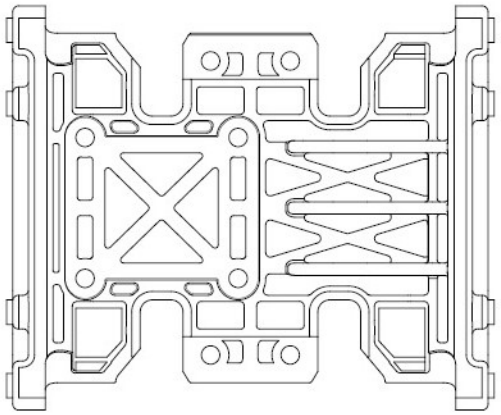
Gearbox chassis ×1
減速箱底盤

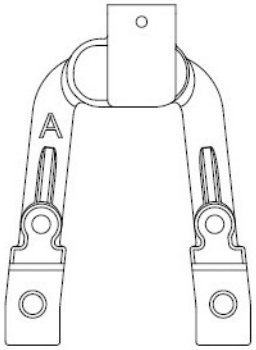

Damper stay A ×2
避震架

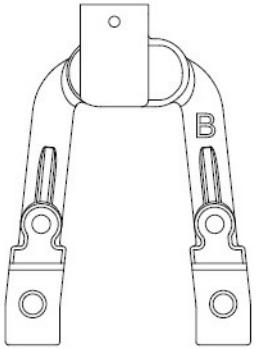

Damper stay B ×2
避震架

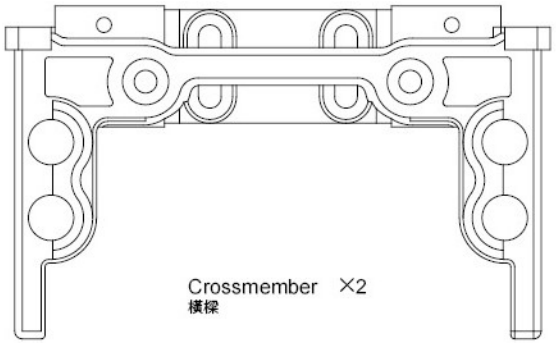
Crossmember ×2
橫樑

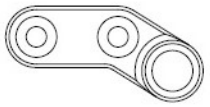
Side sliders mount A ×2
踏板座 A

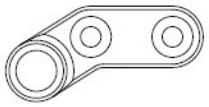
Side sliders mount B ×2
踏板座 B

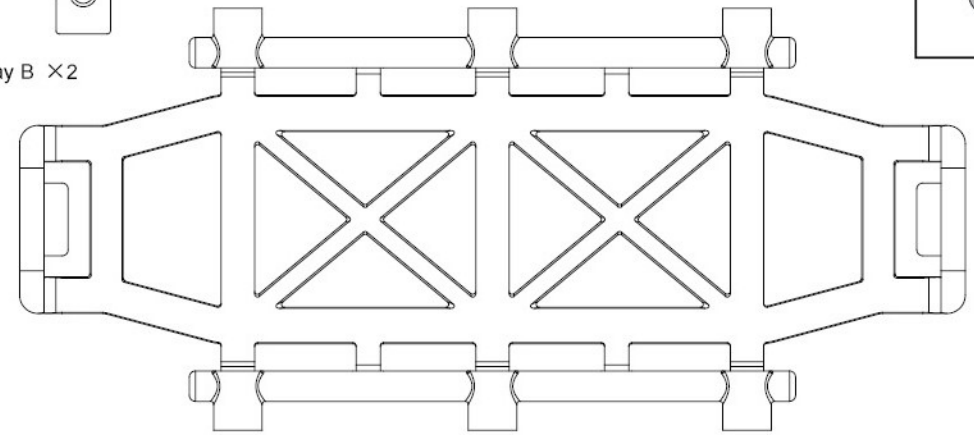
Battery mount ×1
電池盒


Chassis rail ×2
大樑

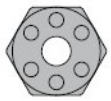
Hex. wheel hubs ×4
六角輪座


5X6.5X2.4 spacer ×2
5X6.5X2.4 墊片

※Keep it for STEP 9
保留零件到第9步驟


Diff Cover ×2
車軸敞蓋


Servo spacer ×2
伺服機墊片

※Keep it for STEP 6
保留零件到第6步驟

◄ FRAME RAIL
車架

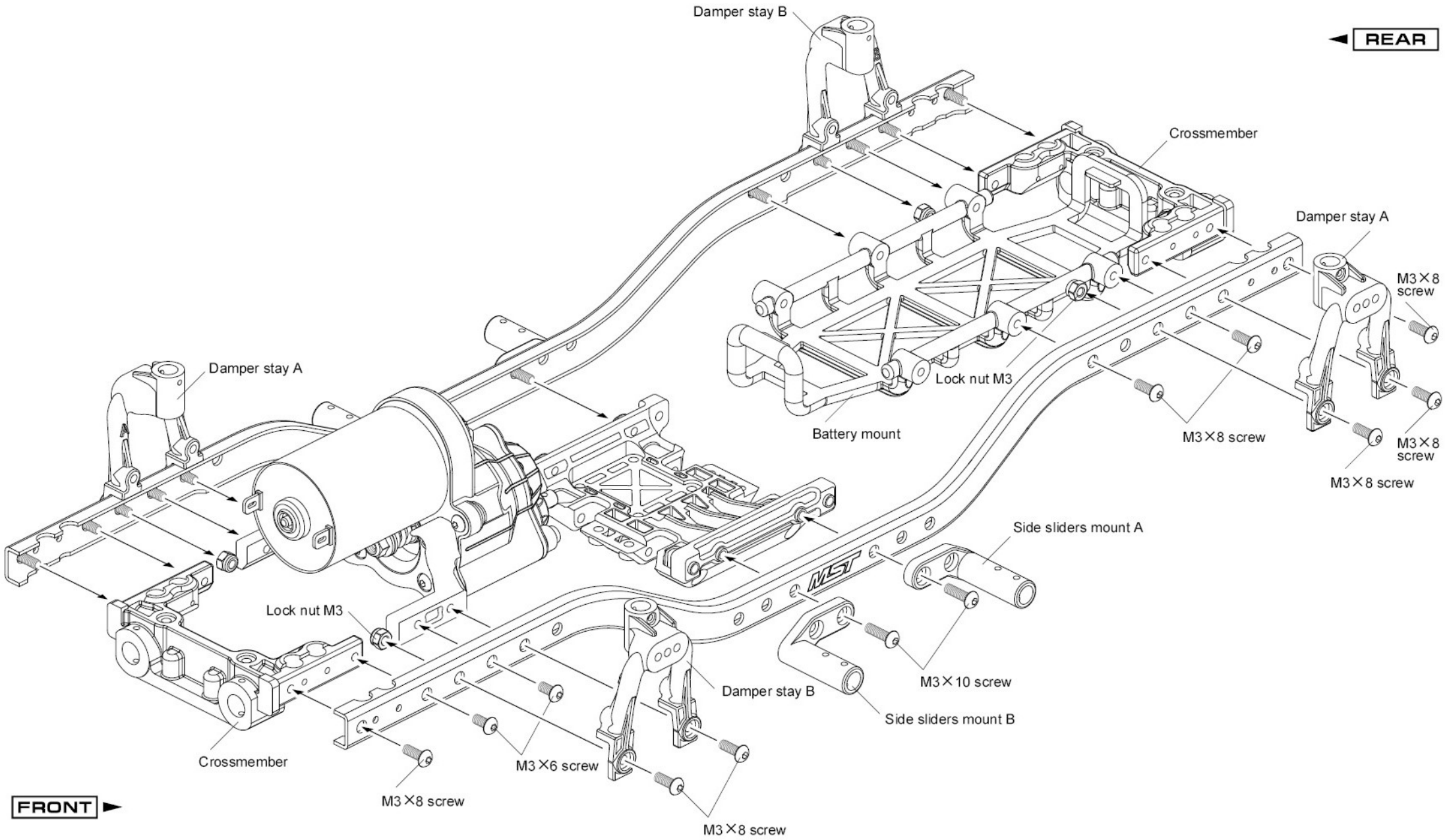

FRAME RAIL
車架

STEP 2 Attaching transfer case
安裝分動箱

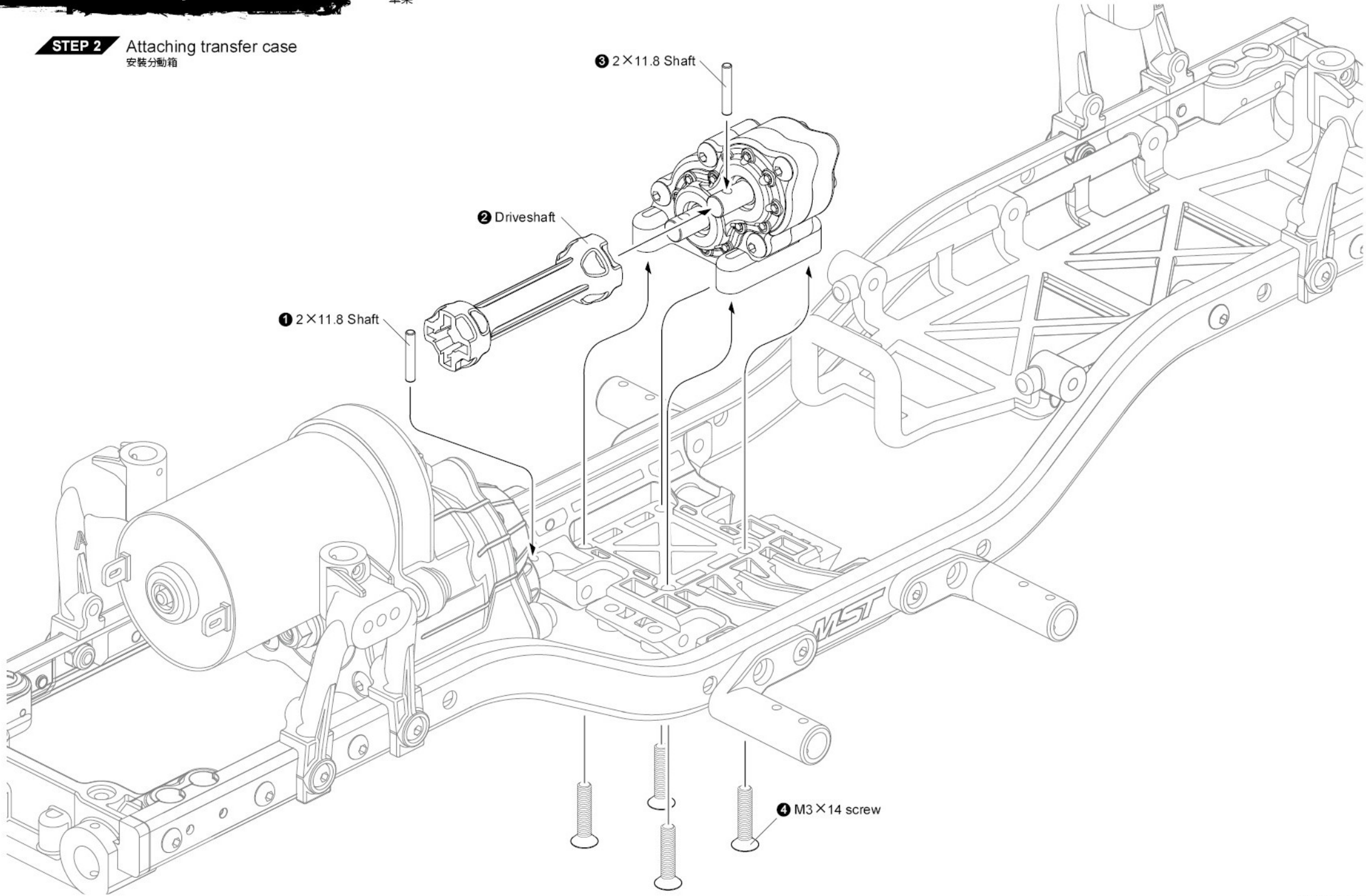

PARTS BAG 5 4

◄ LINKS
拉桿組

M3×16 screw ×4
圓頭螺絲

M3×20 screw ×4
圓頭螺絲

M3×16 screw ×20
止付螺絲

5.8 Ball connector ×30
球頭

3×6×0.5 Spacer ×2
墊片

Lock nut M3 ×4
防鬆螺帽

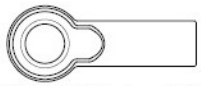

5.8×25 Adjuster ×16
拉桿頭



Adjuster ×2
伺服拉桿頭



Adjuster ×2
轉向拉桿頭



Link（103mm）×1
拉桿 (103mm)



Link（88mm）×2
拉桿 (88mm)



Link（76mm）×2
拉桿 (76mm)



Link（72.5mm）×2
拉桿 (72.5mm)



Link (60.5mm) ×2
拉桿 (60.5mm)

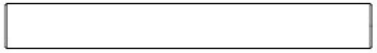

Link (48.5mm) ×1
拉桿 (48.5mm)



Spacer ×2
墊片

※ Keep it for STEP 5
保留零件到第6步驟



Servo mount A ×1
伺服機座

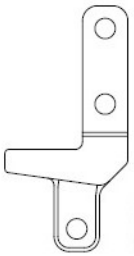

Servo mount B ×1
伺服機座

STEP 1 Upper & Lower link assembly
上&下拉桿組裝

X2 Make 2

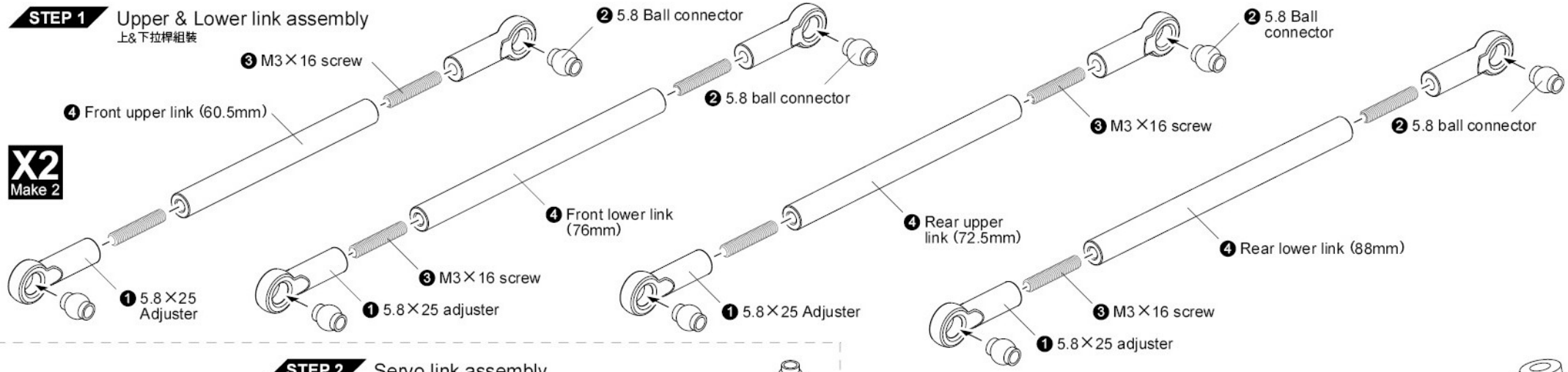

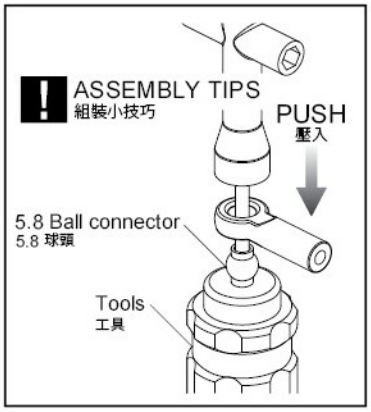

STEP 2 Servo link assembly
伺服拉桿組裝

※ Please change the spacer thickness for the requiring total length.
請依需求調整墊片。

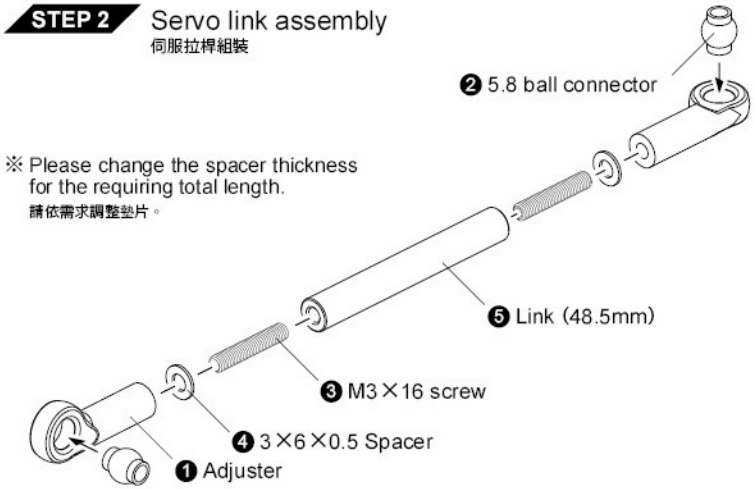

STEP 3 Steering link assembly
轉向拉桿組裝

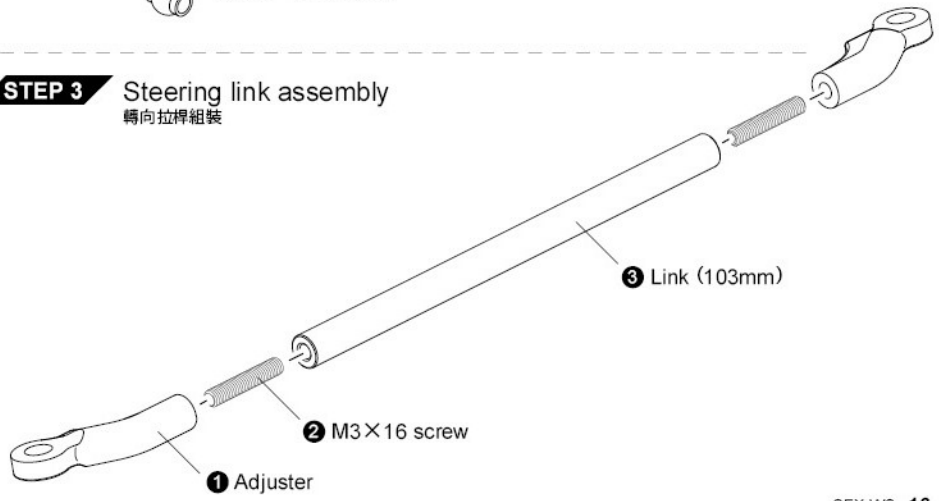

STEP 5 Attaching upper link
安裝上拉桿

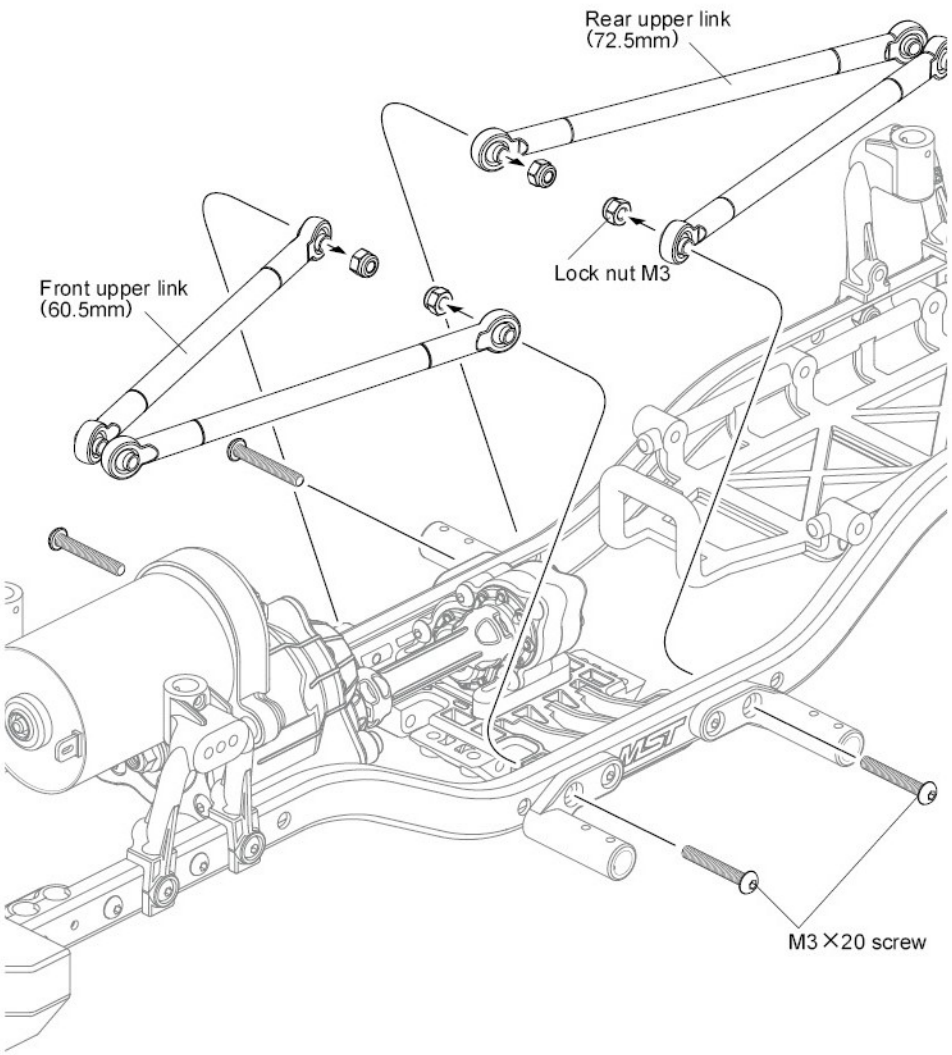

STEP 6 Attaching lower link
安裝下拉桿

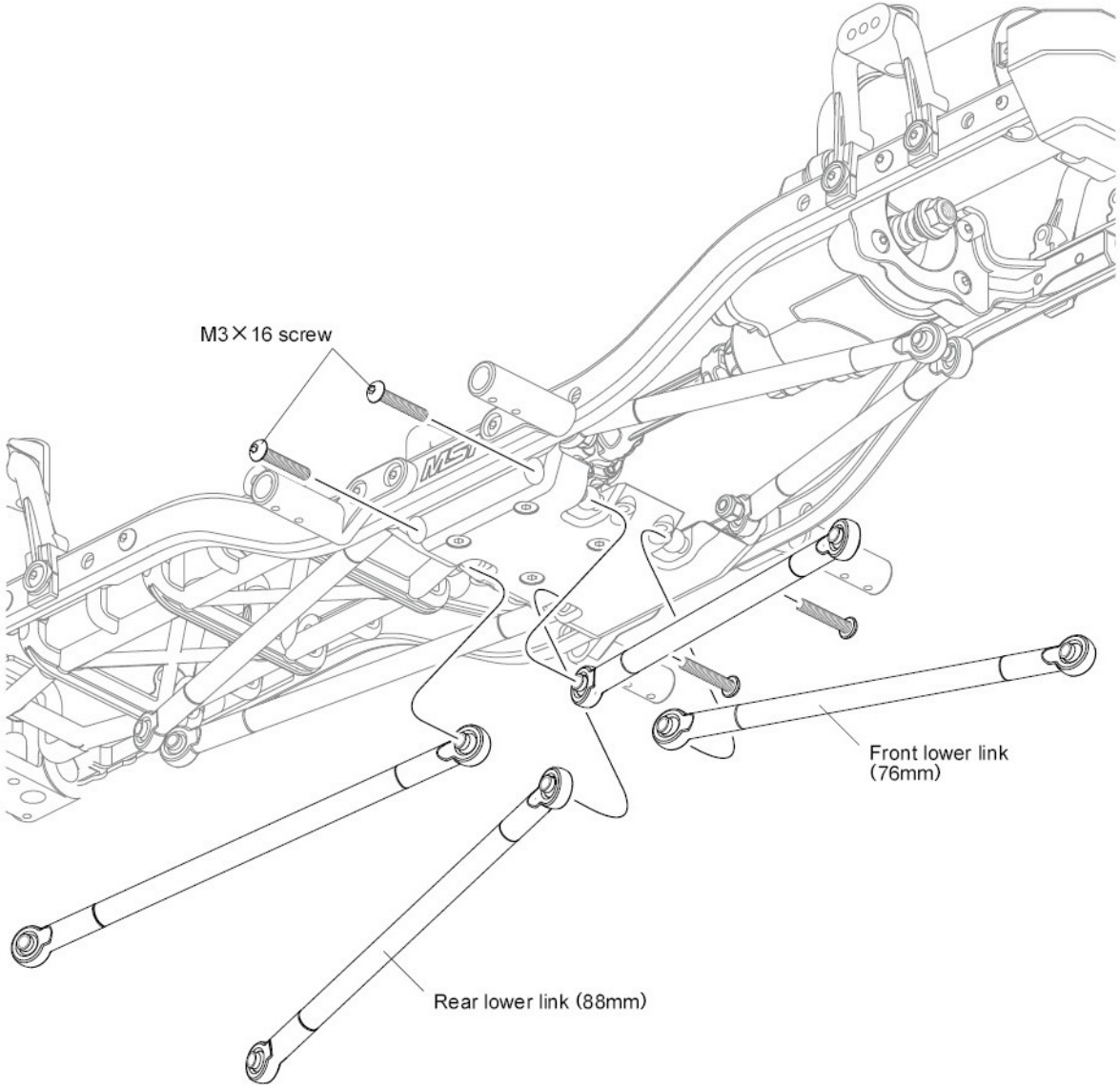

◀ DAMPER
避震器


Cylinder cap ×4
避震器上蓋


Rod guide cap ×4
避震器下蓋


Damper retainer ×4
避震器彈簧座

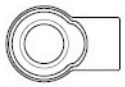
Damper adjuster ×4
避震器拉桿

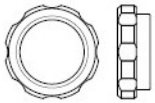
Spring retainer ×4
避震器調整環


8.5×1 O-ring ×4
O環


6×1 O-ring ×4
O環


Piston rod ×4
避震軸心


Damper O-ring P3 ×8
避震器O環


Rod guide ×4
避震器下蓋墊片


Piston ×4
活塞


3×6×0.5 Spacer ×4
墊片


E-clip ×8
E扣

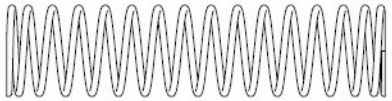
Coil spring 50mm (medium) (gold) ×4
避震彈簧 50mm (中) (金)

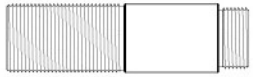
Damper cylinder ×4
避震筒身

STEP 1 Damper assembly
避震器組裝

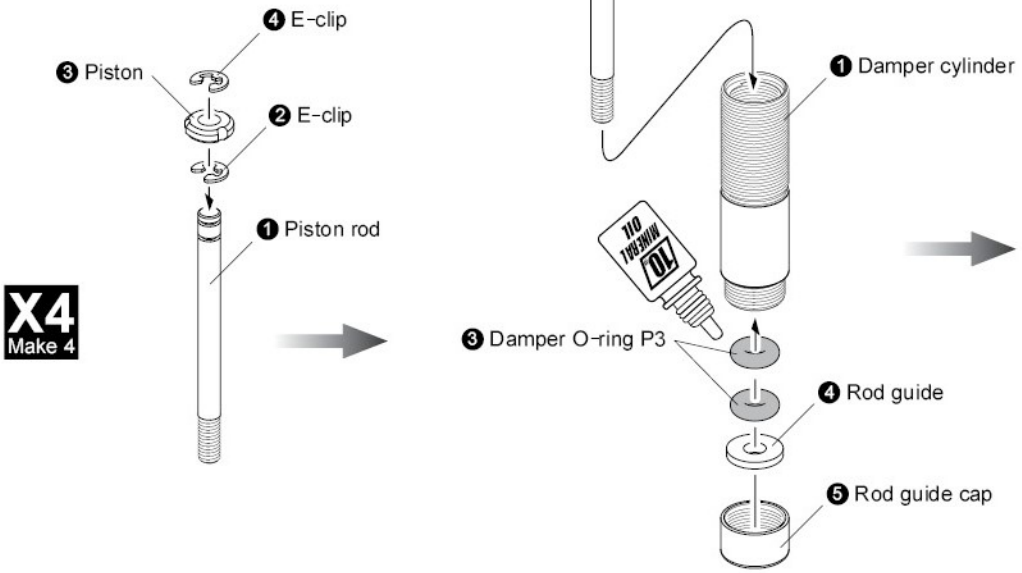

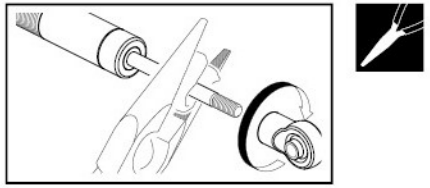

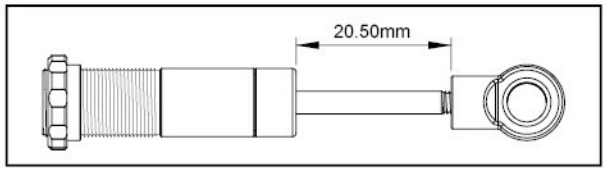

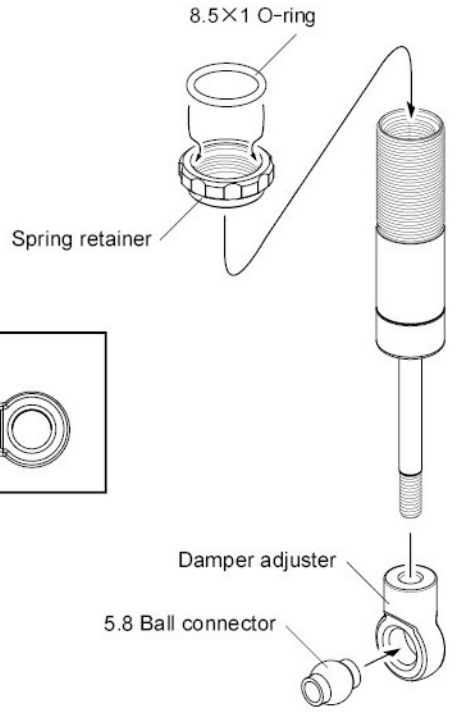

◄ DAMPER
避震器

STEP 1 Damper assembly
避震器組裝

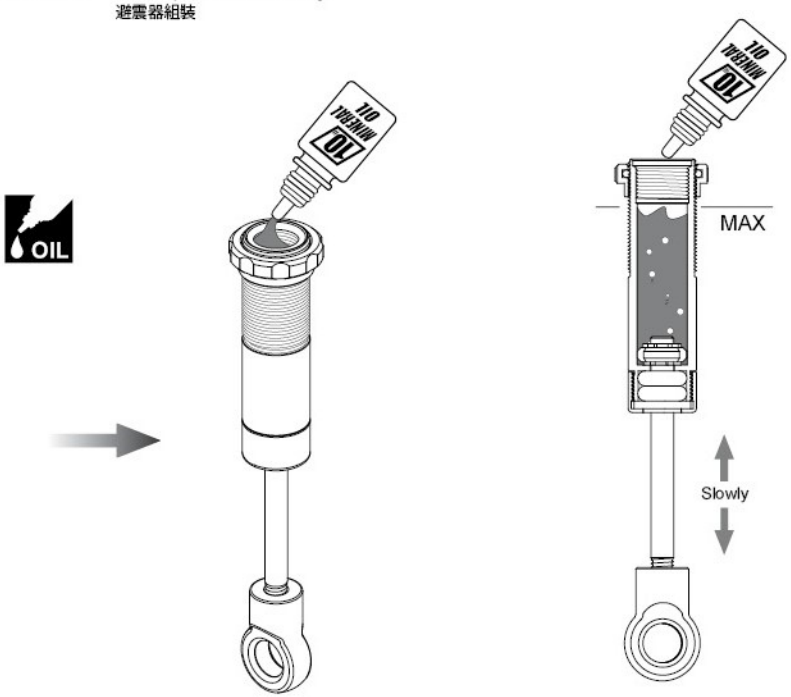



Pull down piston and pour oil into cylinder. Remove air bubbles by slowly moving piston up and down.
拉下活塞並填入避震油，緩慢上下移動活塞將氣泡移除。

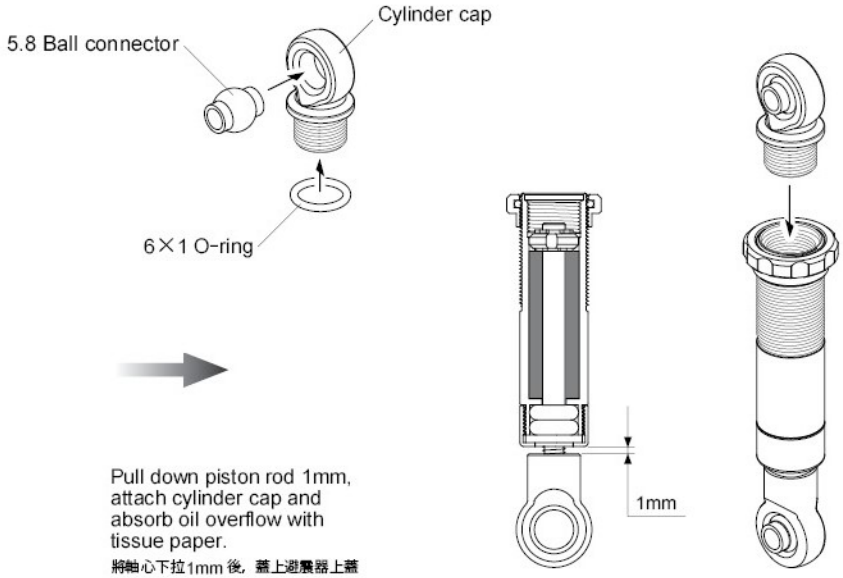

Pull down piston rod 1mm, attach cylinder cap and absorb oil overflow with tissue paper.
將軸心下拉1mm後，蓋上避震器上蓋並以面紙拭去溢出的避震油。

OPTIONAL PARTS



TC80 Alum. shocks (silver)(4)
TC80 鋁合金避震器組(銀)(4)
820130S

SPECIFICATION
Length (Mounting hole to hole) : 80mm
Shock Body Diameter : 9mm
Spring Diameter : 12mm
Spring Length : 30mm X2
Full Shaft Travel Range : 25mm
Shaft Diameter : 3mm
Dual Spring Design

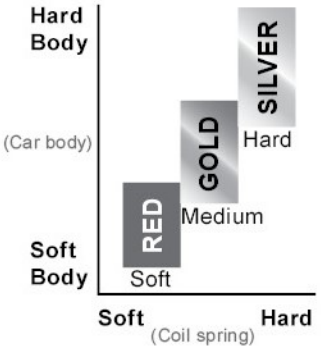

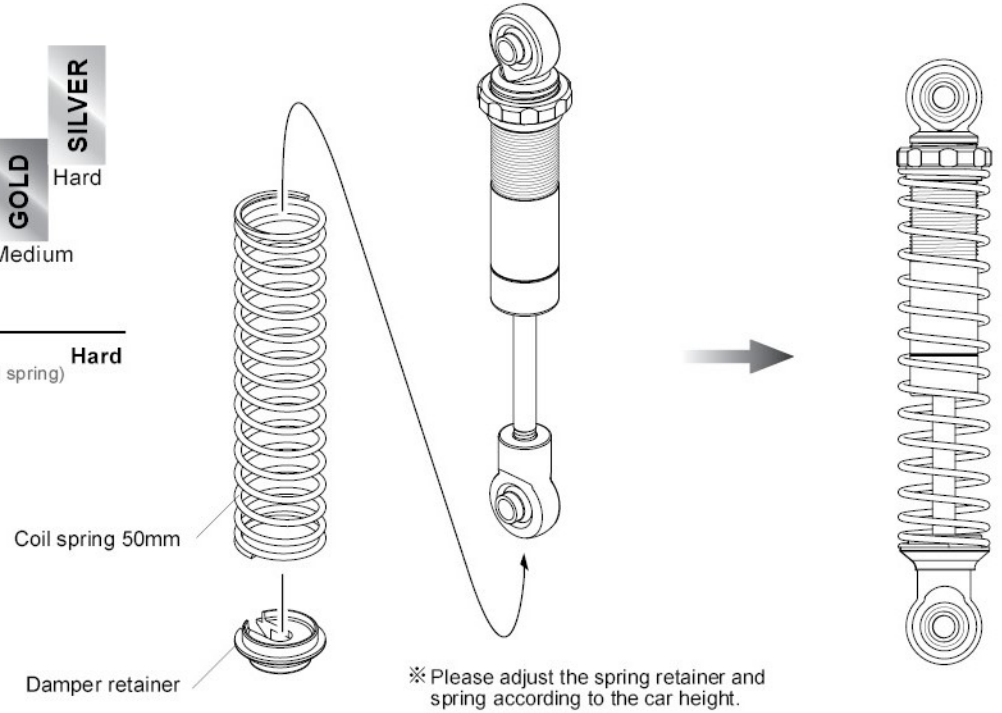

※ Please adjust the spring retainer and spring according to the car height.
請依車高調整調整環和彈簧。

AXLE
車軸


M2×6 screw ×12
圓頭螺絲


2×10.8 Shaft ×2
插銷


M3×6 screw ×4
圓頭螺絲


Lock nut M3 ×7
防鬆螺帽


M3×10 screw ×7
圓頭螺絲


3×6×0.5 Spacer ×4
墊片


M3×14 screw ×1
圓頭螺絲


3×8×0.5 Spacer ×1
墊片


M3×16 screw ×1
圓頭螺絲


5×7×0.3 Spacer ×2
墊片


M3×18 screw ×4
圓頭螺絲

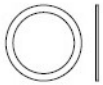
8×10×0.3 Spacer ×2
墊片


M3×20 screw ×1
圓頭螺絲


E-clip 2.0 ×2
E扣

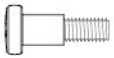
King pin screw ×4
大王螺絲


E-clip 4.0 ×2
E扣


Bevel gear shaft ×2
小傘齒軸


G-clip 11.0 ×2
G扣

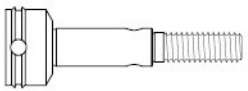
Wheel axle ×2
萬向接杯


SA25 CVA axle ×2
SA25 CVA 輸軸

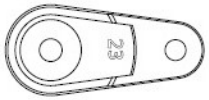

23T Servo horn ×1
伺服機片

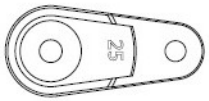

25T Servo horn ×1
伺服機片


5×10×4 Ball bearing ×10
培林


8×12×3.5 Ball bearing ×6
培林


Bevel gear 15T ×2
小傘齒

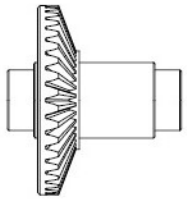
Bevel gear 36T ×2
大傘齒



Diff Cover ×2
車軸殼蓋

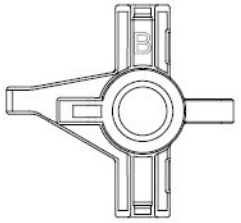

Knuckle B ×1
轉向座

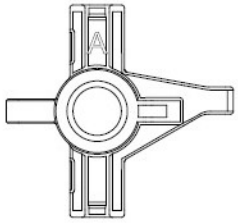

Knuckle A ×1
轉向座


SA25 Rear axle ×2
SA25 後輸軸

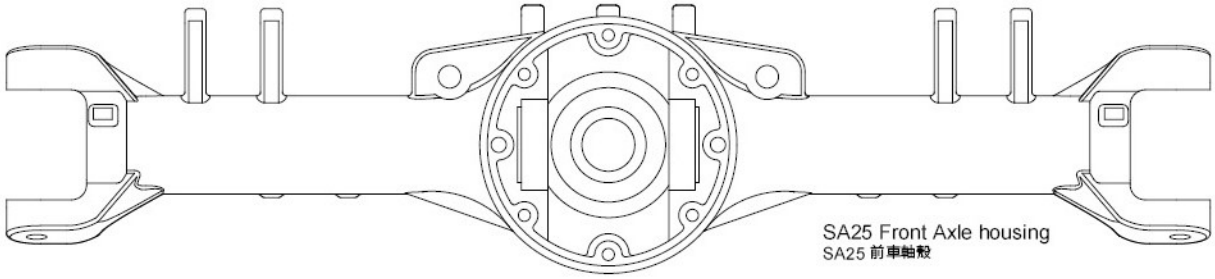
SA25 Front Axle housing
SA25 前車軸殼

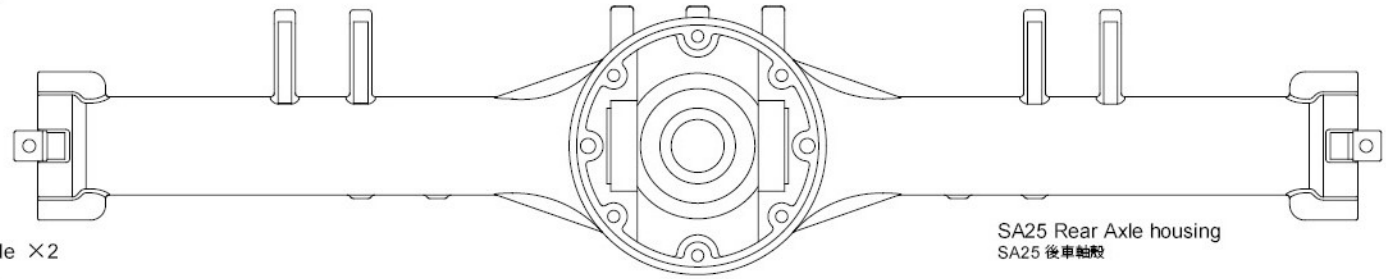
SA25 Rear Axle housing
SA25 後車軸殼