STEP 1 Bevel gear assembly
小傘齒組裝

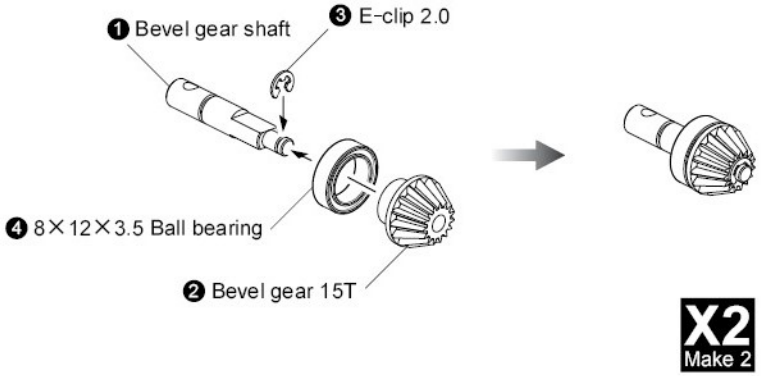

STEP 2 Attaching bevel gear
安裝傘齒

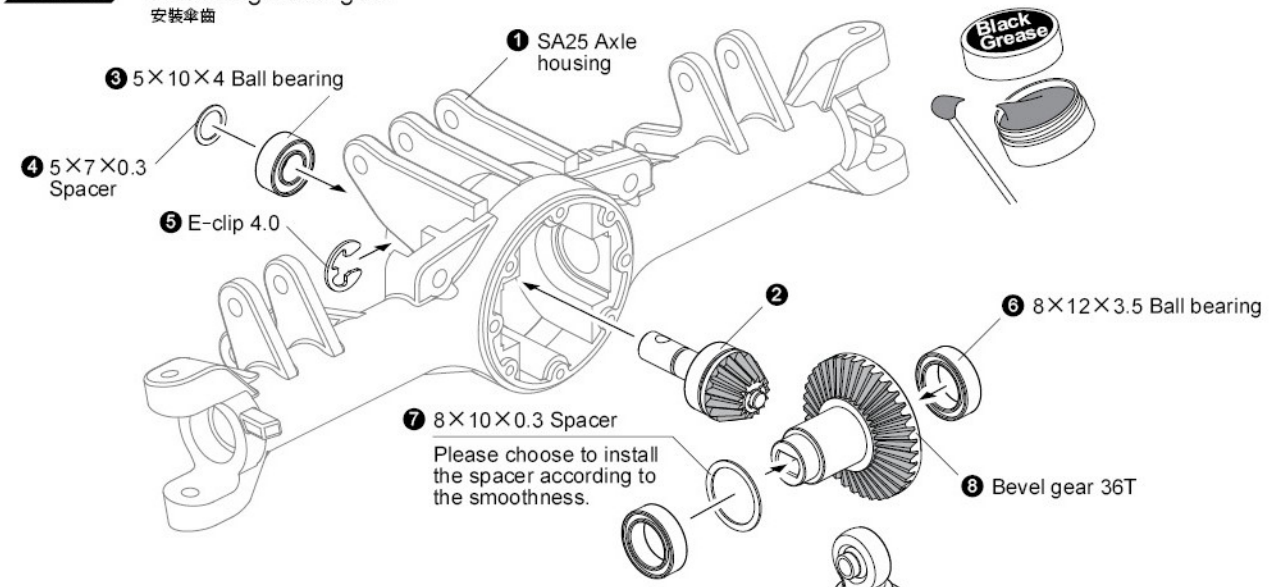

STEP 3 Attaching diff cover
安裝車軸殼蓋

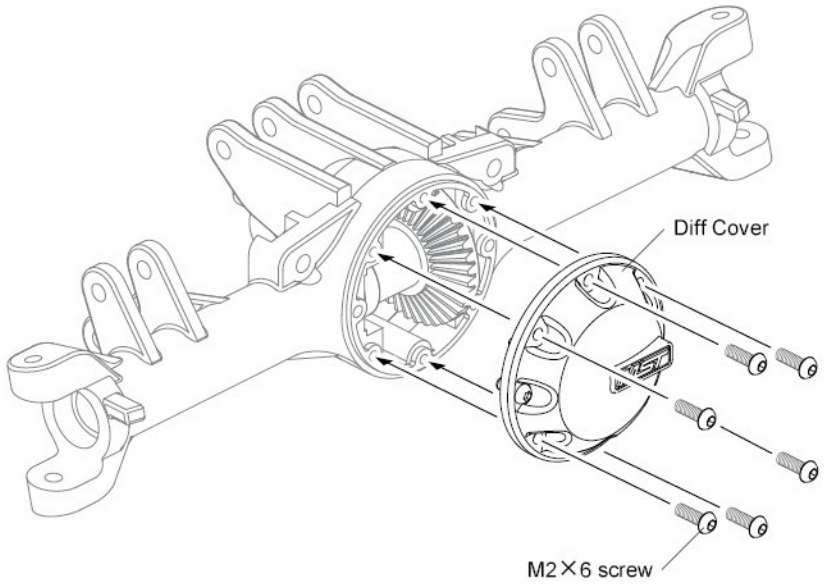

STEP 4 Attaching damper
安裝避震器

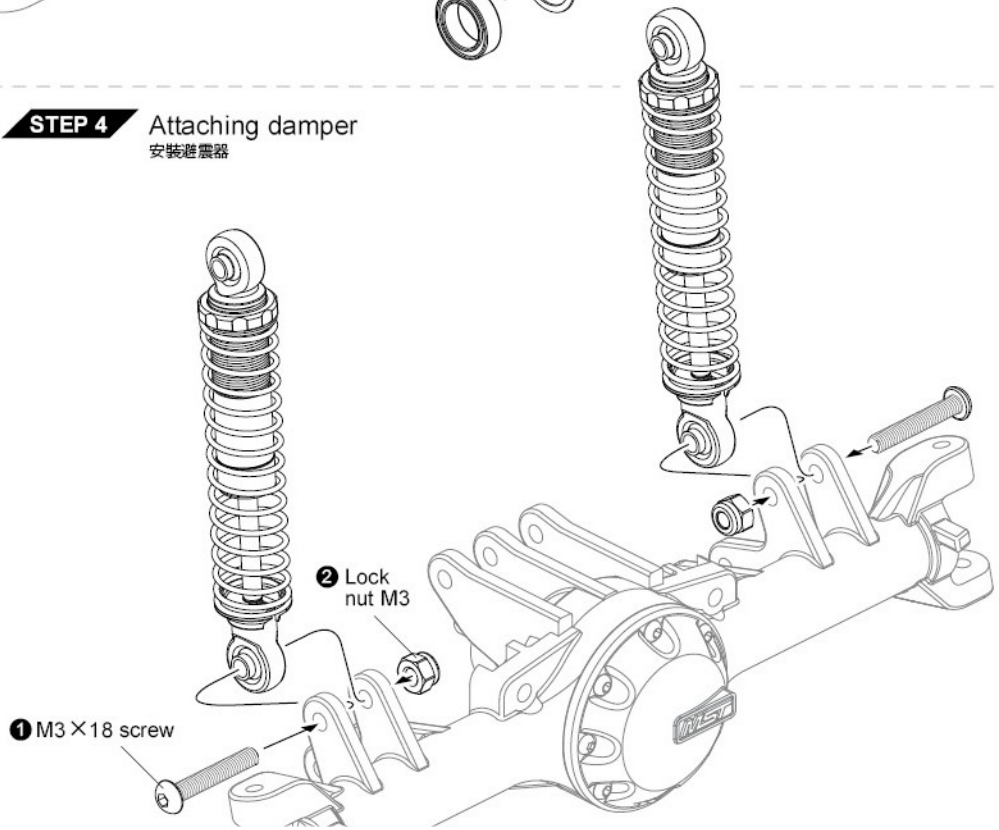

STEP 5 Wheel axle assembly
萬向接杯組裝

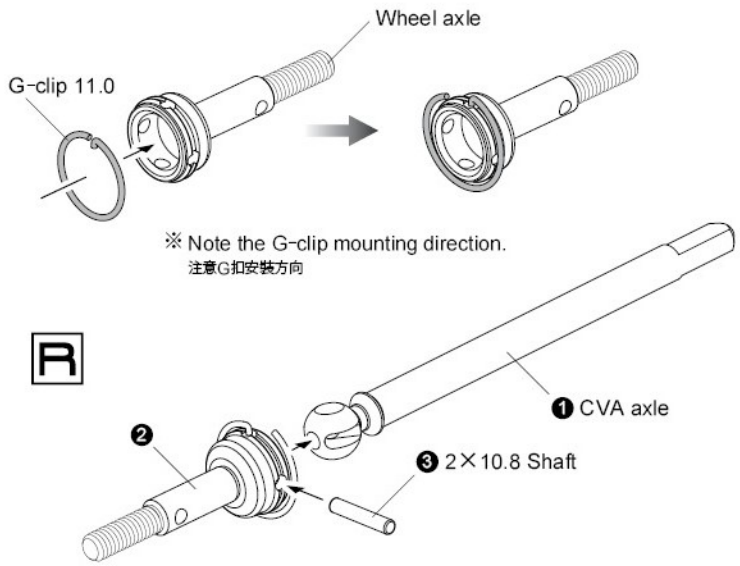

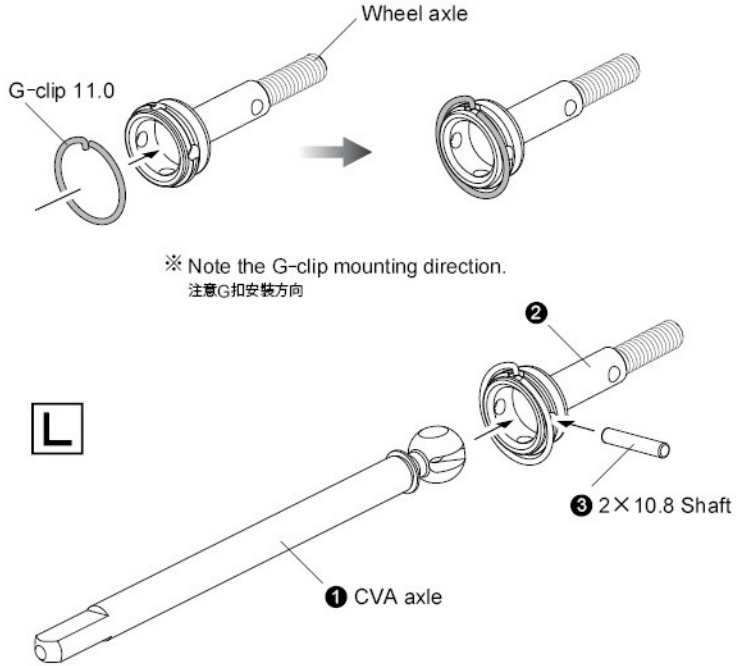

STEP 6 Attaching CVA axle
安裝CVA車軸

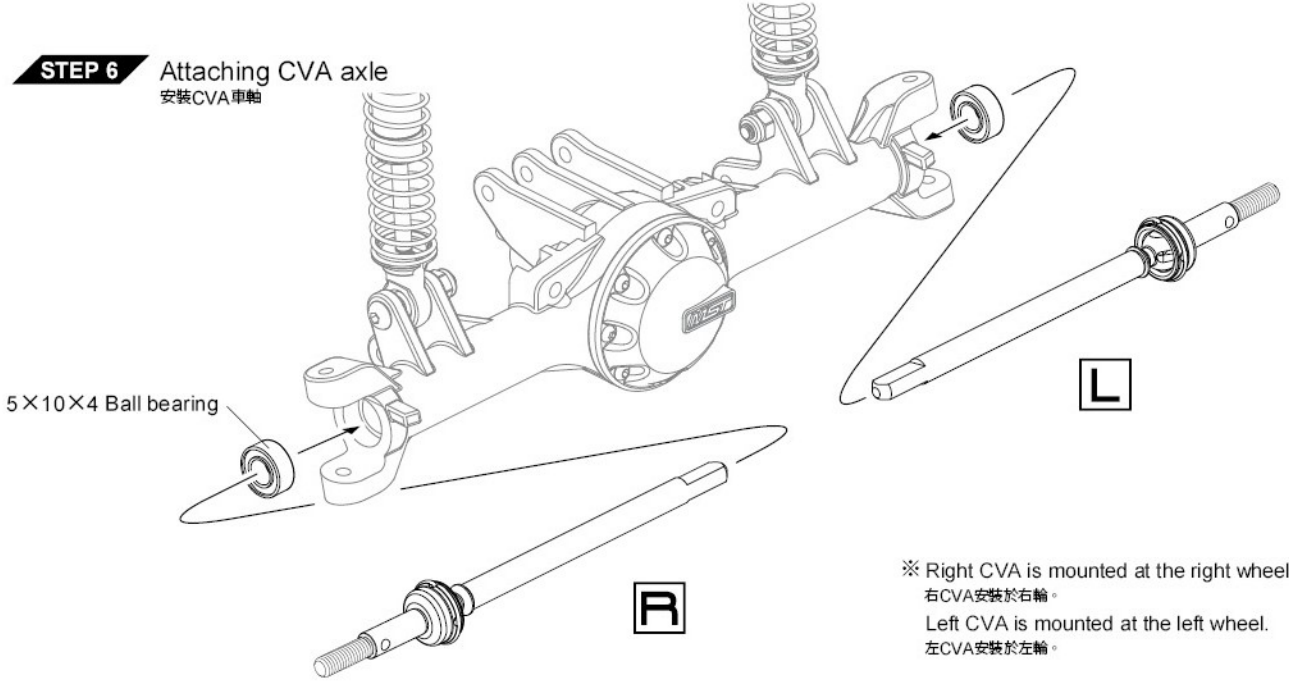

※ Right CVA is mounted at the right wheel.
右CVA安裝於右輪。
Left CVA is mounted at the left wheel.
左CVA安裝於左輪。

STEP 7 Attaching knuckle
安裝轉向座

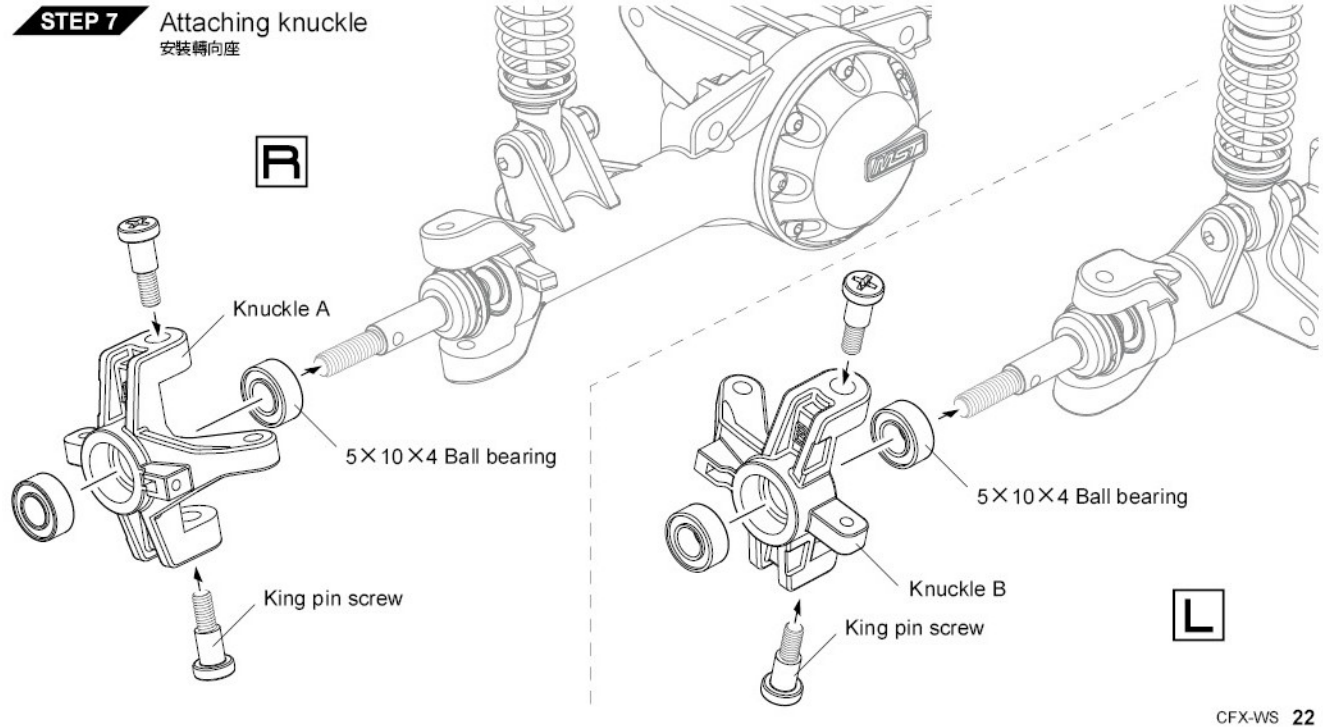

STEP 8 Servo mount assembly
伺服機座組裝

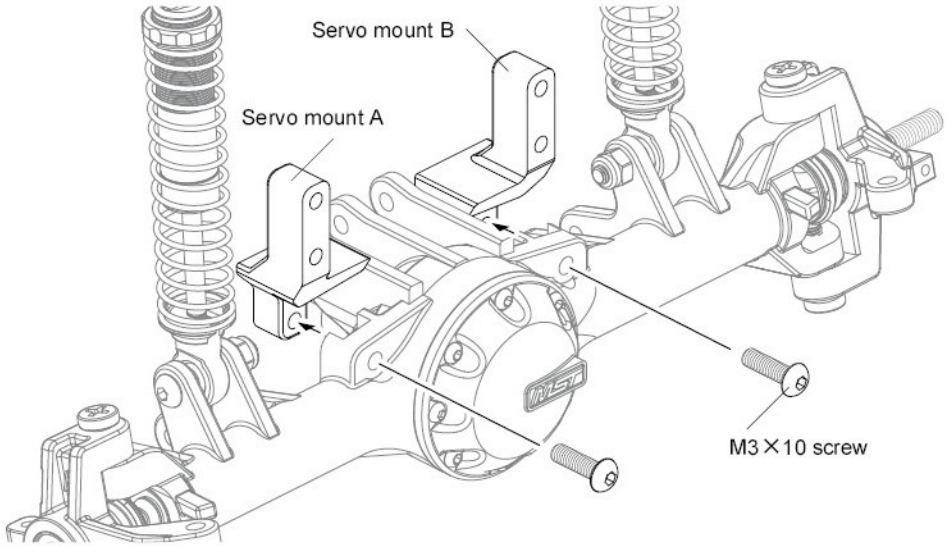

STEP 9 Servo link assembly
伺服拉桿組裝

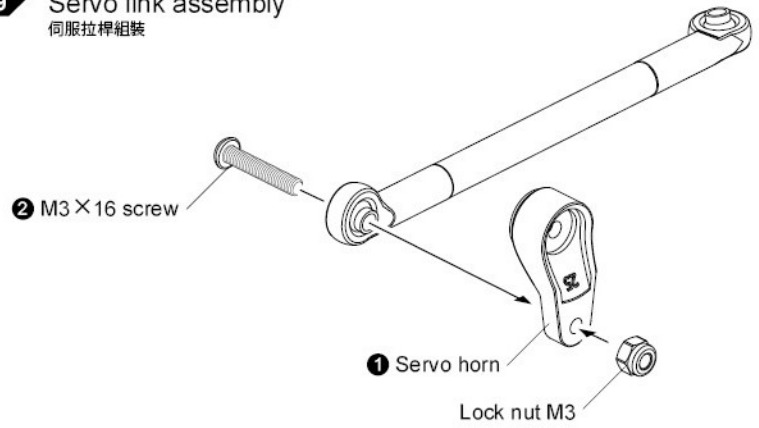

STEP 10 Steering servo assembly
轉向伺服機組裝

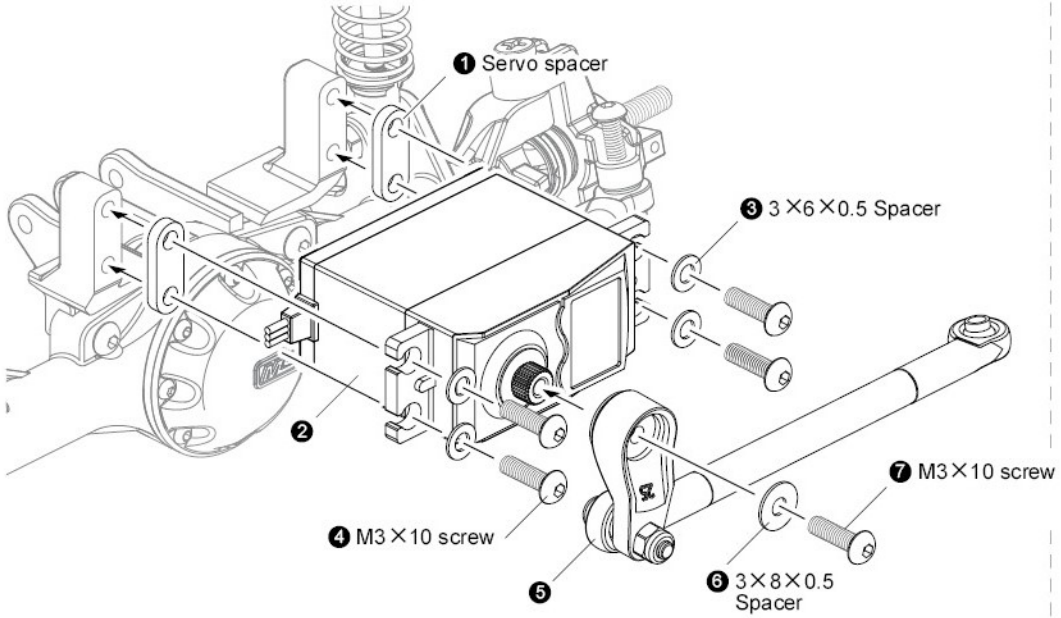

STEP 11 Attaching steering link
安裝轉向拉桿

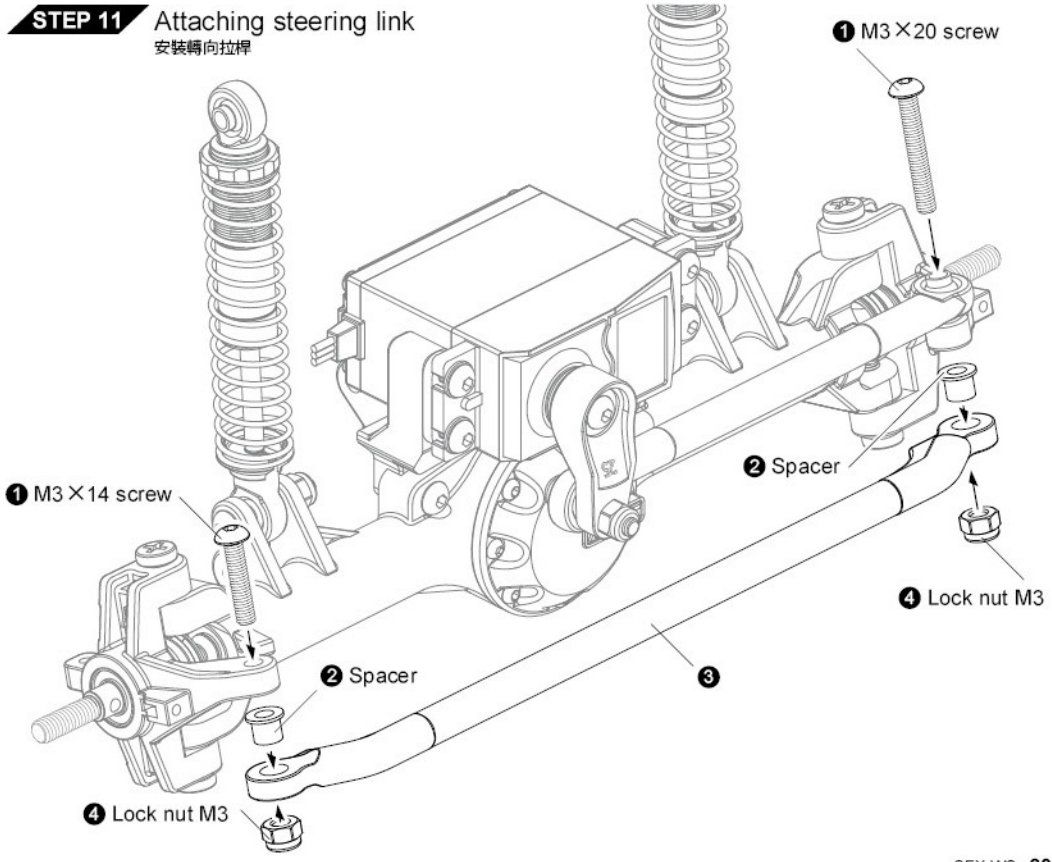

STEP 12 Attaching bevel gear
安裝傘齒

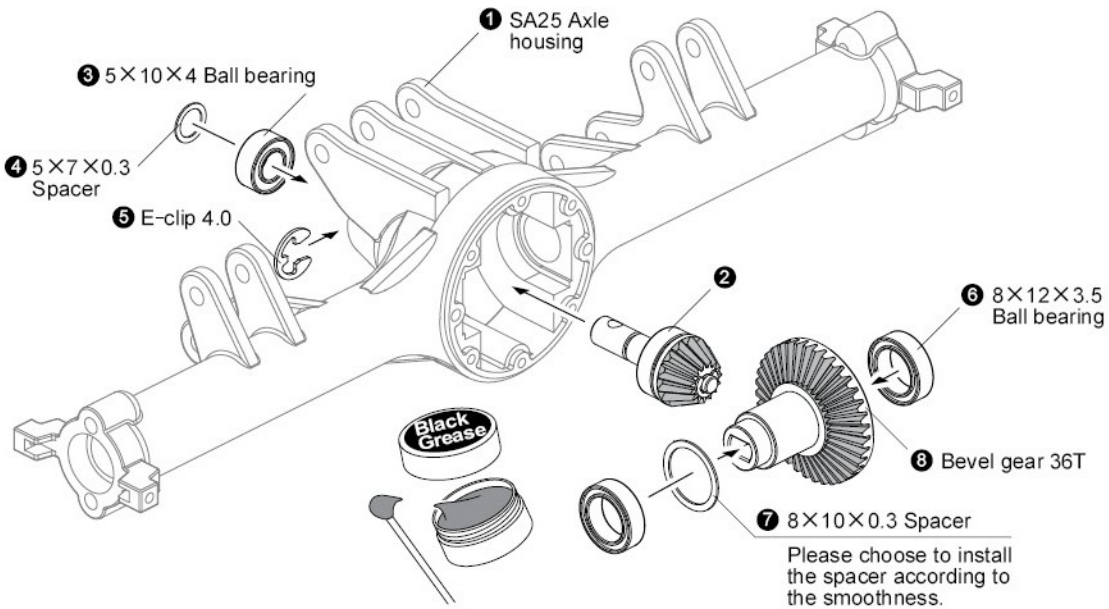

STEP 13 Attaching diff cover
安裝車軸殼蓋

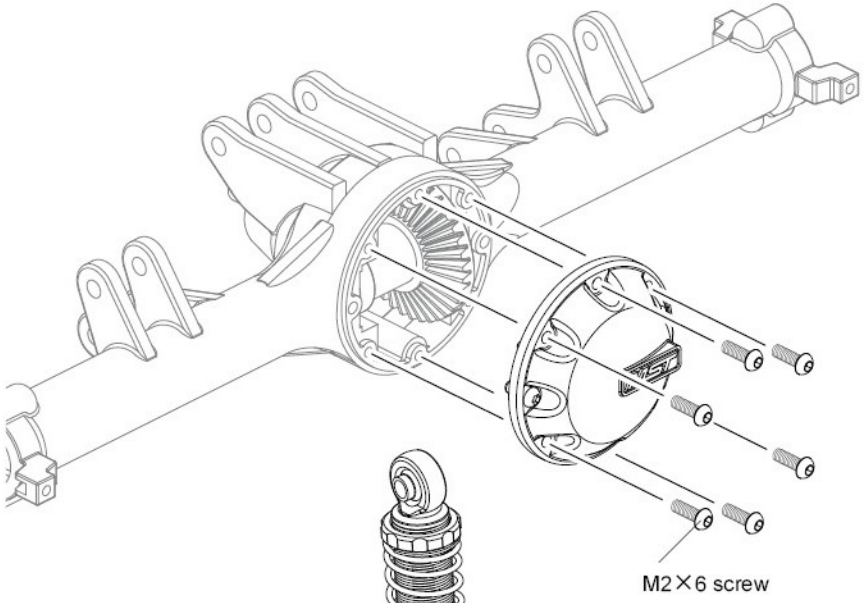

STEP 14 Attaching rear axle
安裝後輪軸

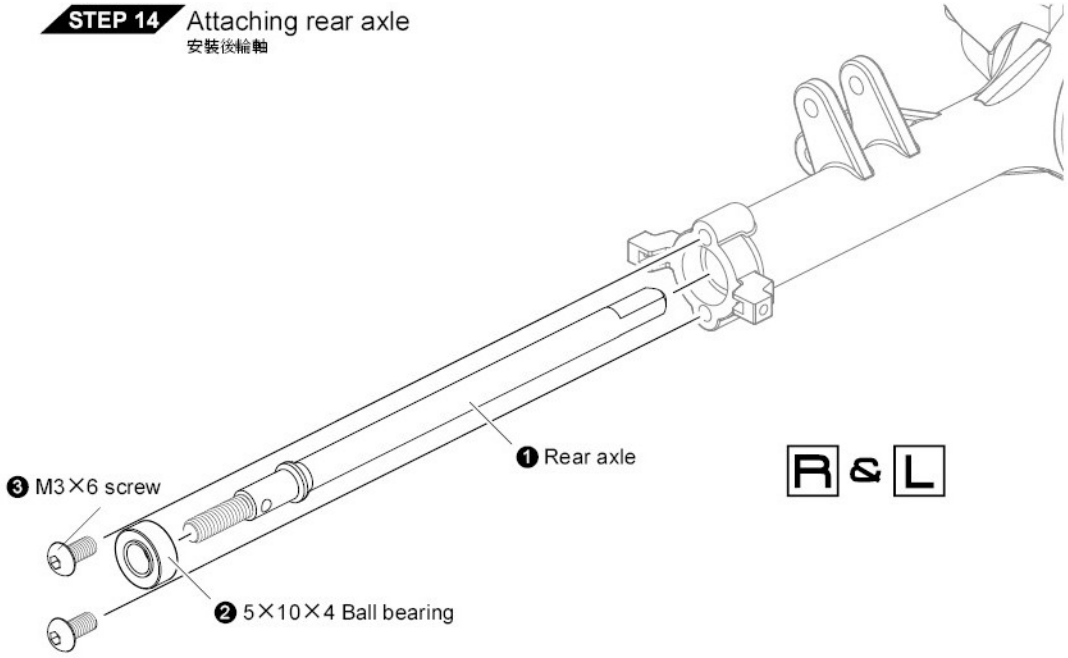

STEP 15 Attaching damper
安裝避震器

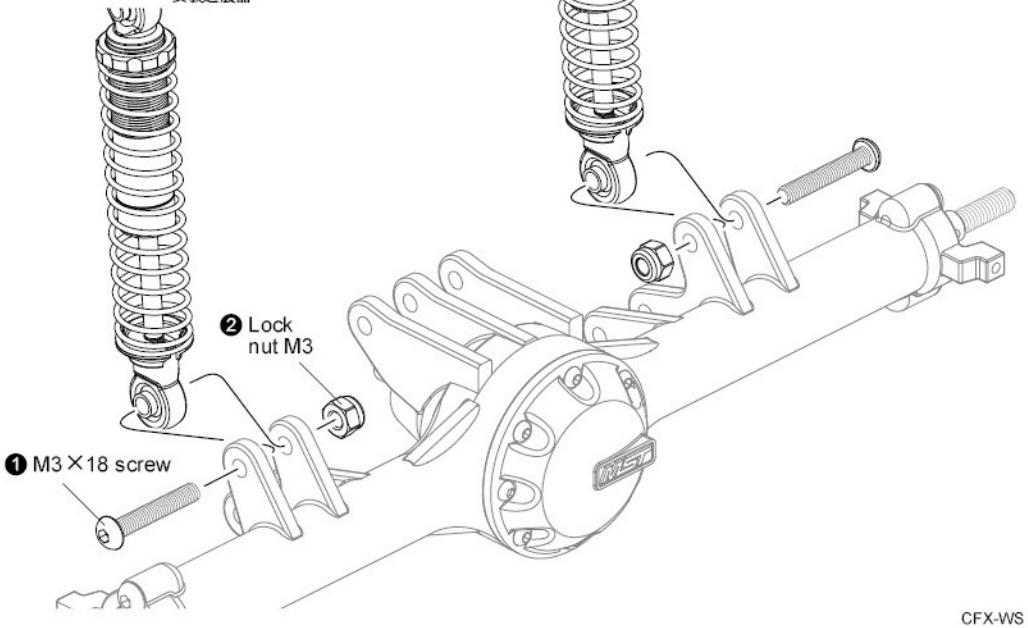

DRIVESHAFT
傳動軸



M3×14 screw ×4
圓頭螺絲



M3×18 screw ×4
圓頭螺絲



M3×30 screw ×2
圓頭螺絲

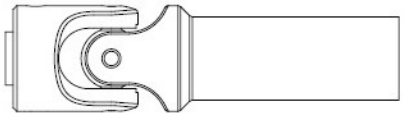

Driveshaft ×4
傳動軸

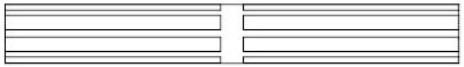

Driveshaft (short) ×1
傳動軸



Driveshaft (long) ×1
傳動軸



2.8×1.9 O-ring ×6
O環



Lock nut M3 ×6
防鬆螺帽



Shaft screw ×4
銷釘螺絲

STEP 1 Attaching driveshaft
安裝傳動軸

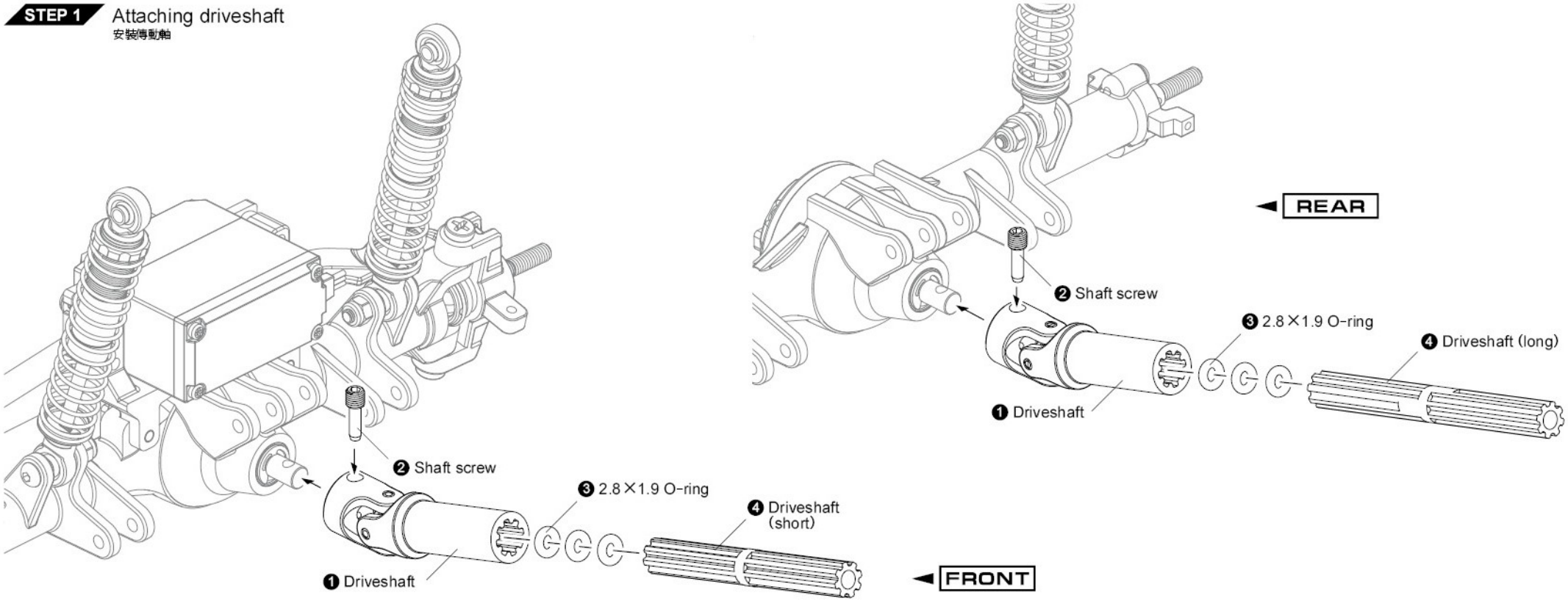

DRIVESHAFT
傳動軸

STEP 2 Attaching driveshaft
安裝傳動軸

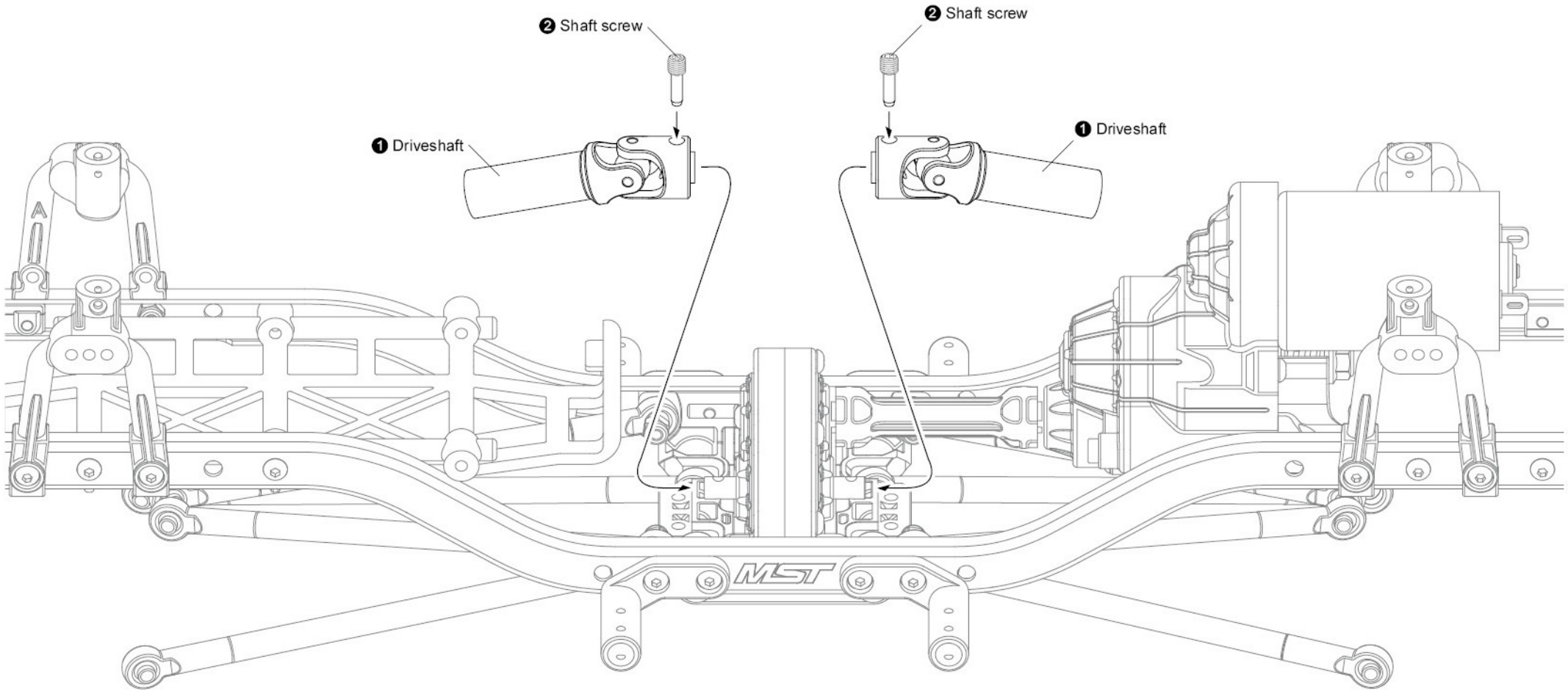

STEP 3 Attaching front axle
安裝前車軸

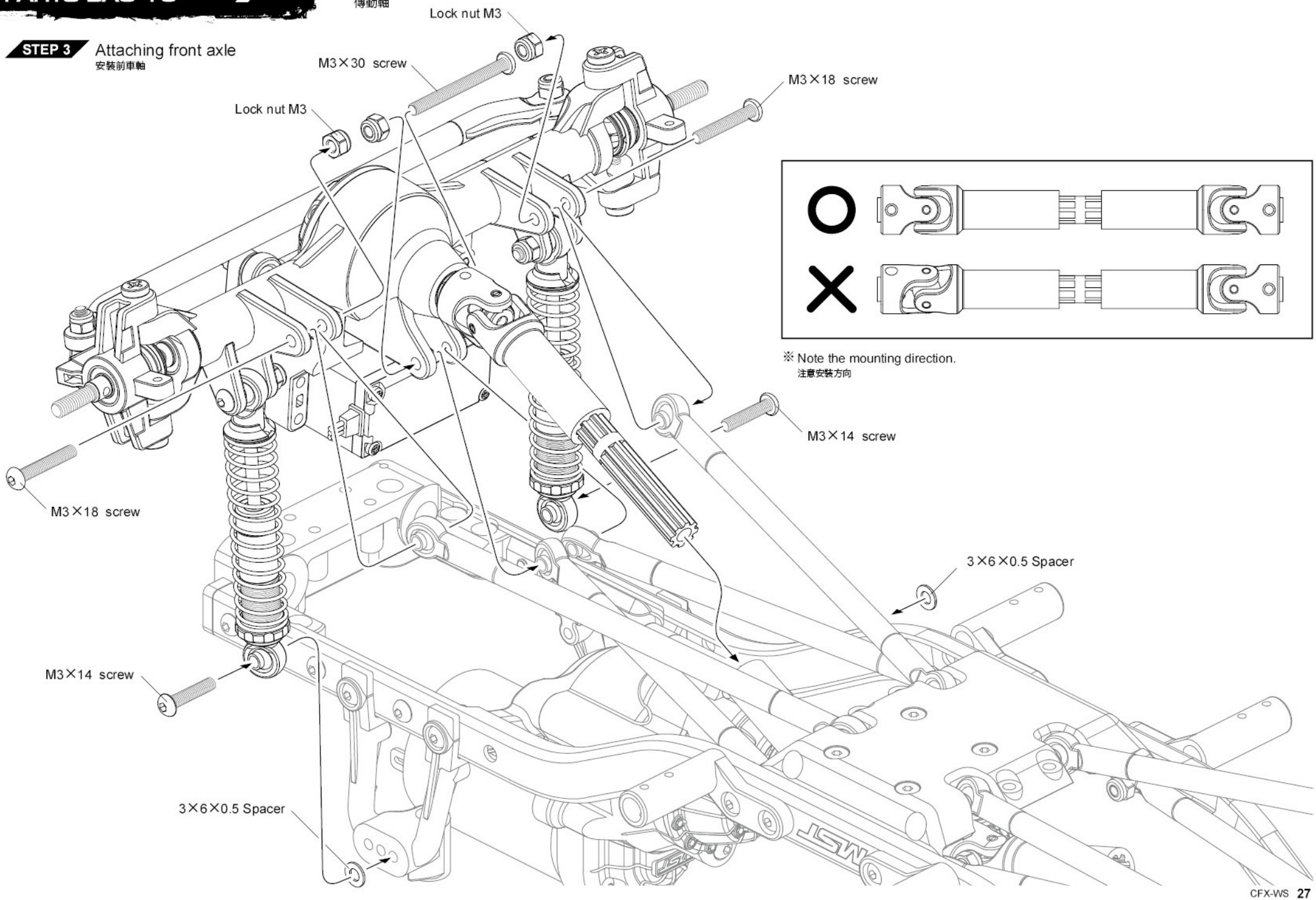

※ Note the mounting direction.
注意安裝方向

DRIVESHAFT
傳動軸

STEP 3 Attaching rear axle
安裝後車軸

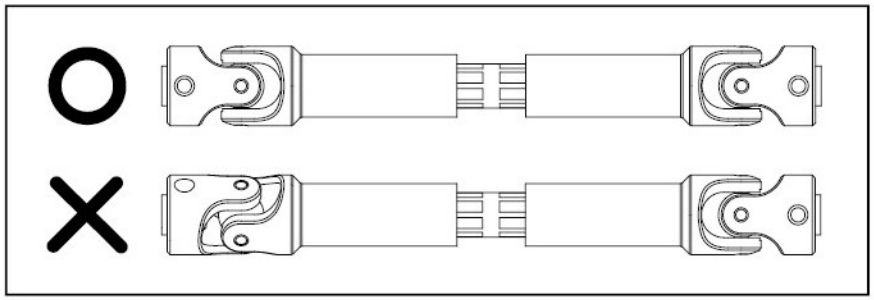

※ Note the mounting direction.
注意安裝方向

◀ BATTERY MOUNT
電池座

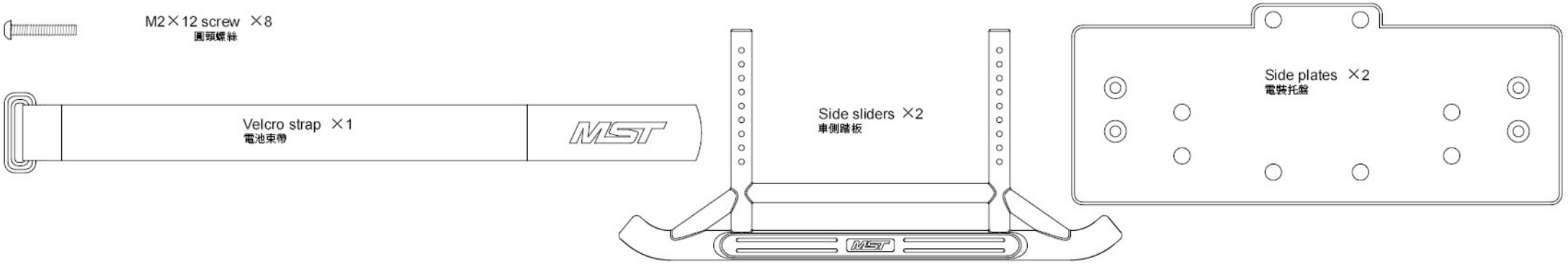

STEP 1 Attaching side sliders
安裝車側踏板

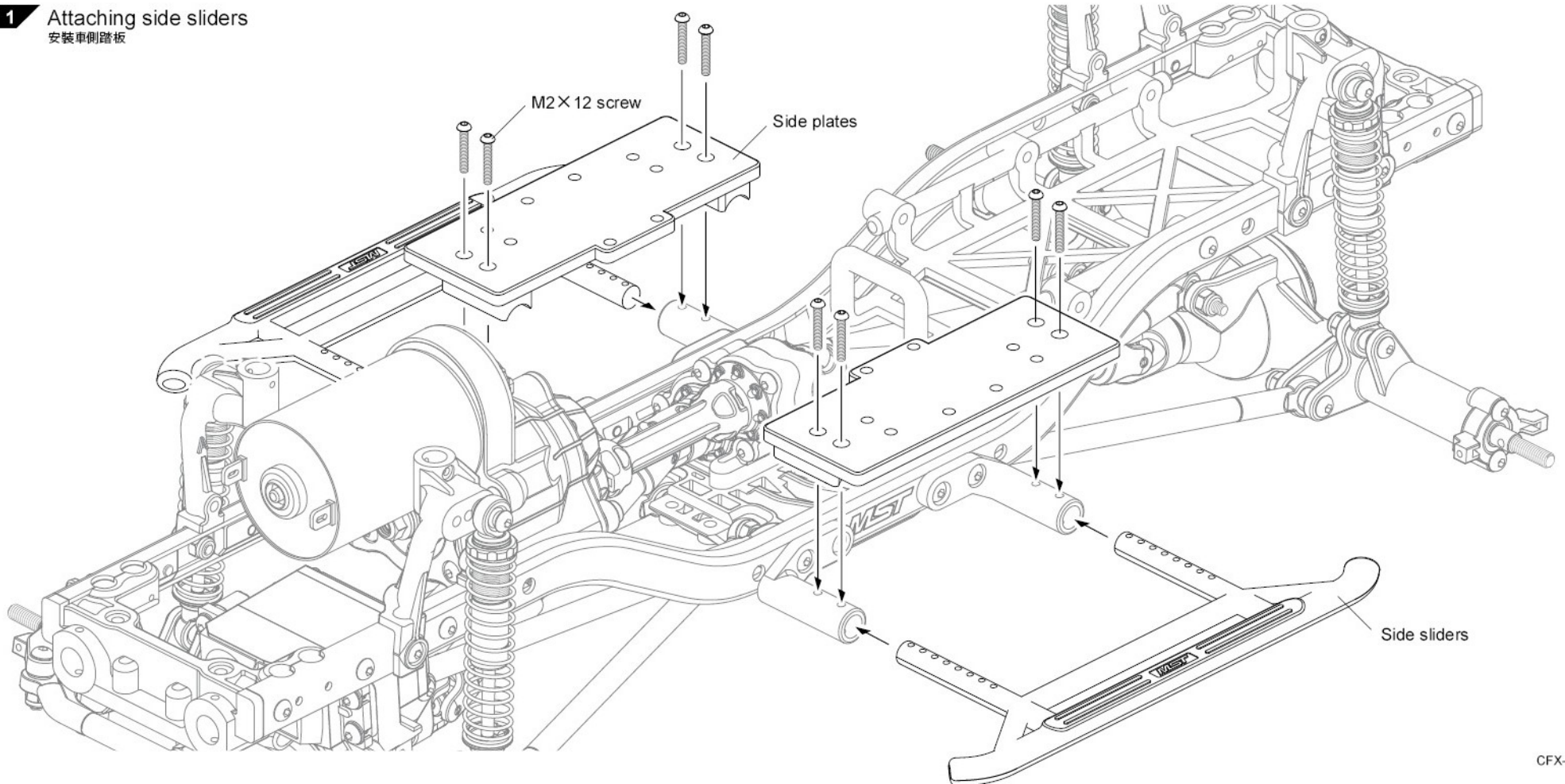

◄ BATTERY MOUNT
電池座

STEP 2 Attaching velcro strap
安裝電池束帶

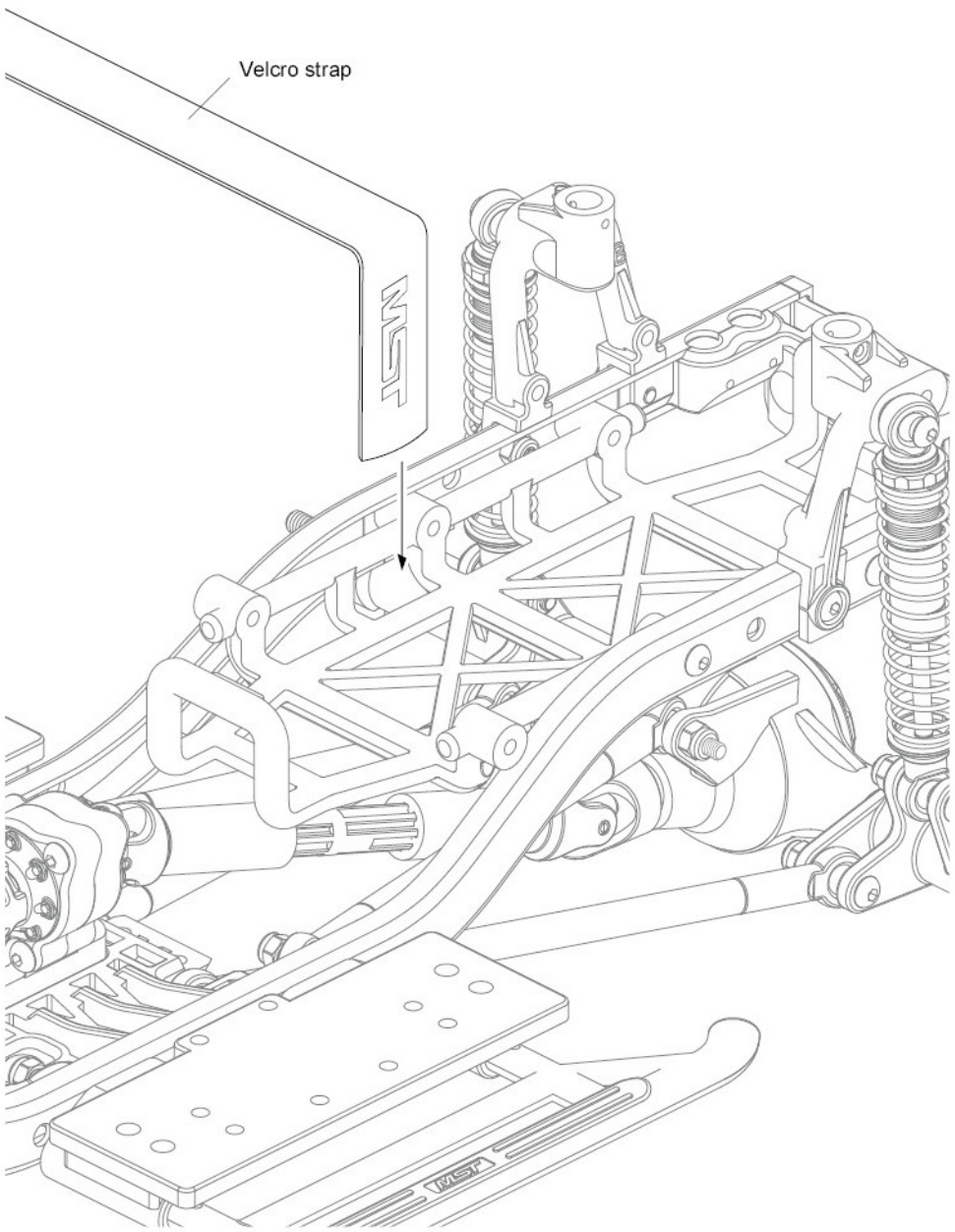

STEP 3 Attaching ESC、receiver
安裝電子變速器、接收機

※ Please refer to the ESC instructions for adjustment.
電子變速器調整說明，請參閱該說明書。

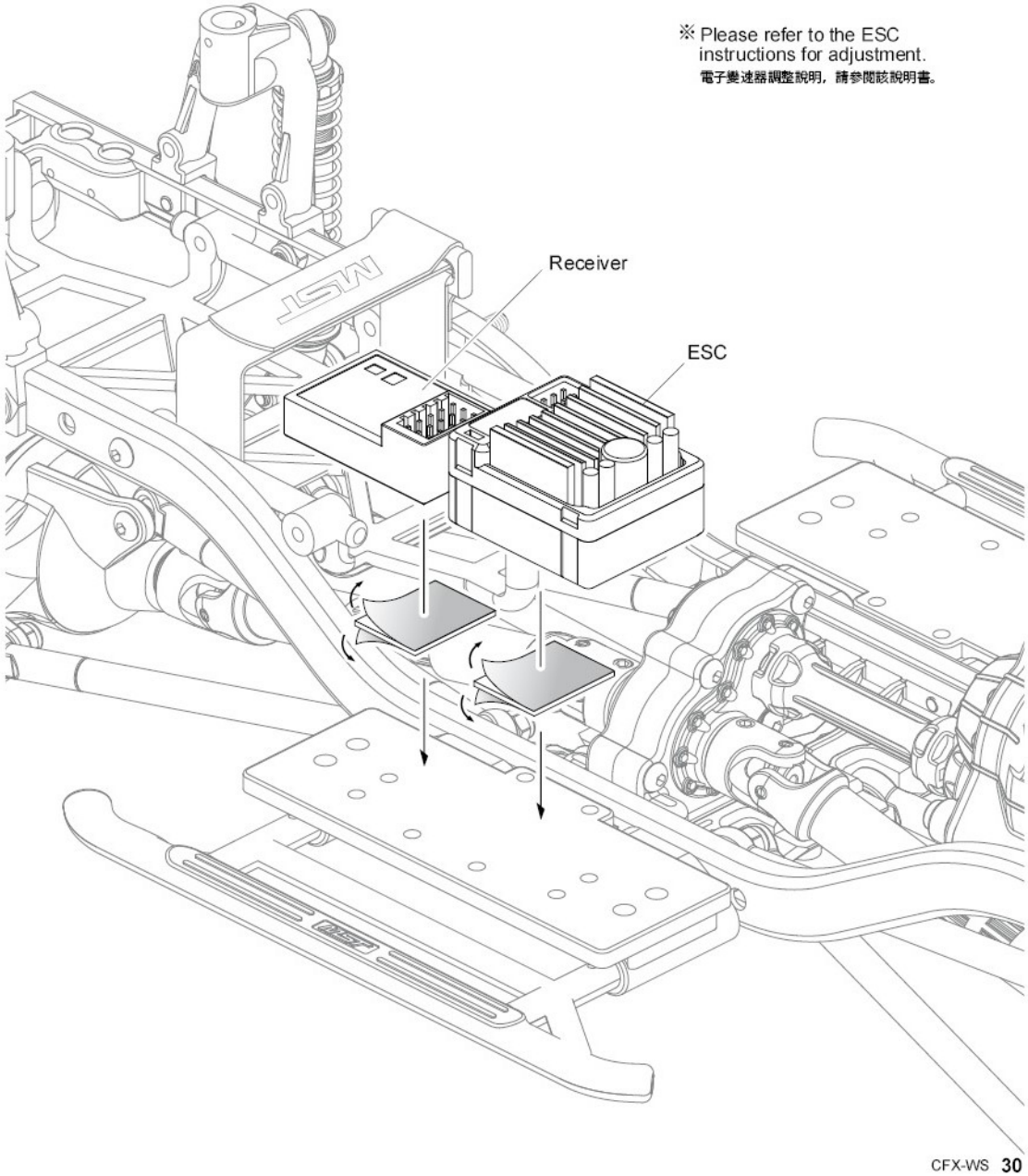

◄ WHEELS
輪胎

2×9.8 Shaft ×4
插銷



Lock nut M4 ×4
防鬆螺帽

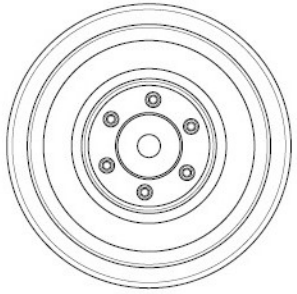

Wheel ×4
輪框

※ Please make the object as the standard.
請以實物為主。

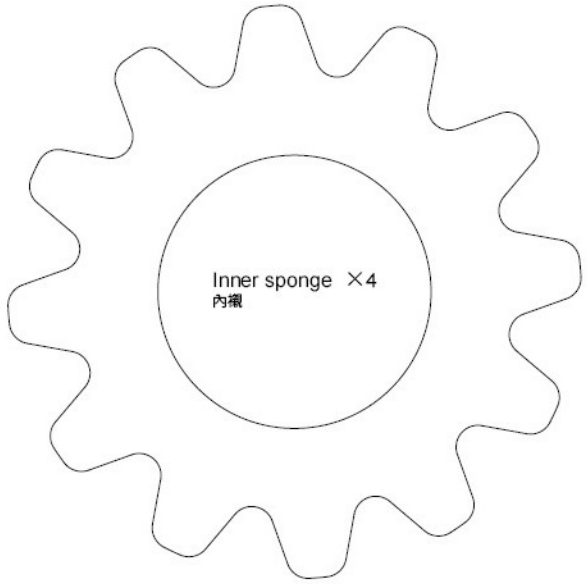

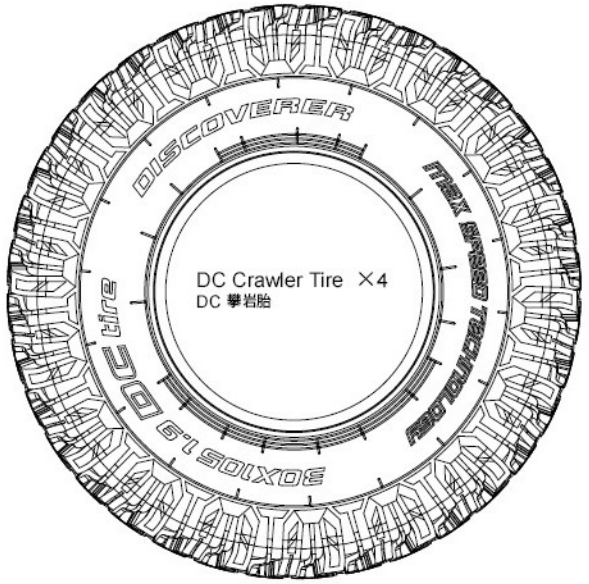

STEP 1 Assemble tire and wheel
胎框組合

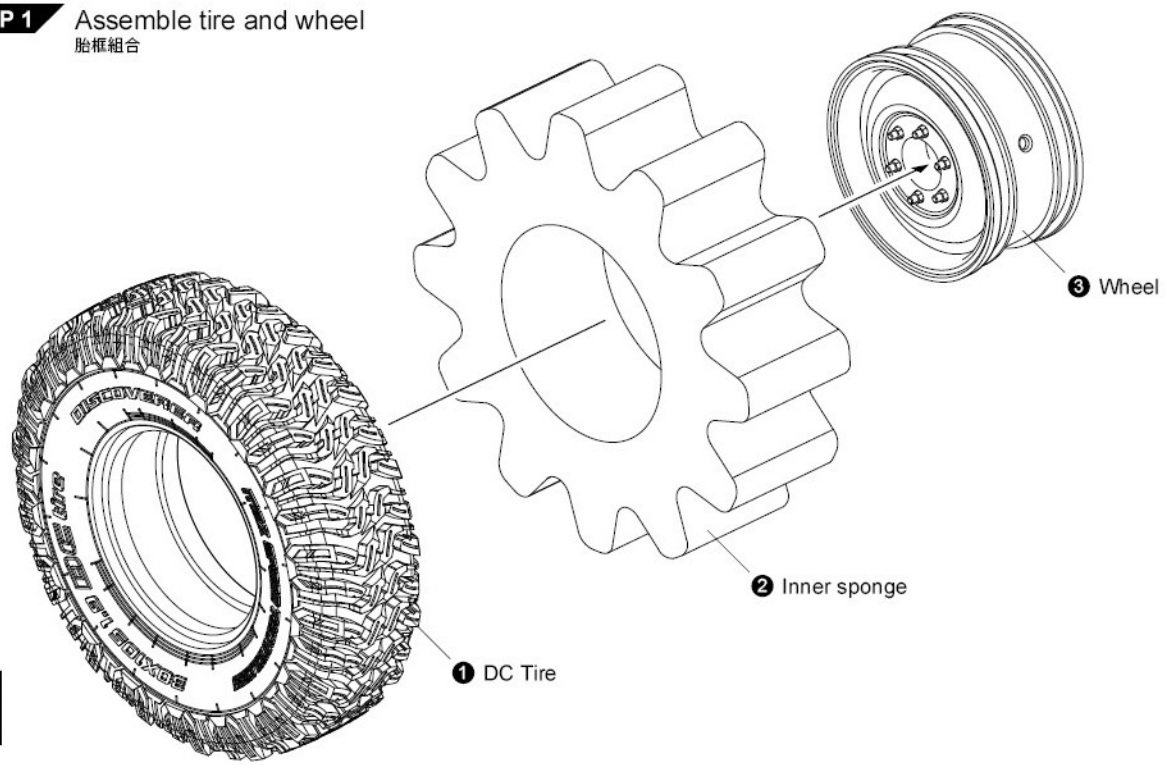

※ Adhesive
上膠固定。

※ Glue on both sides.
兩側都須上膠。

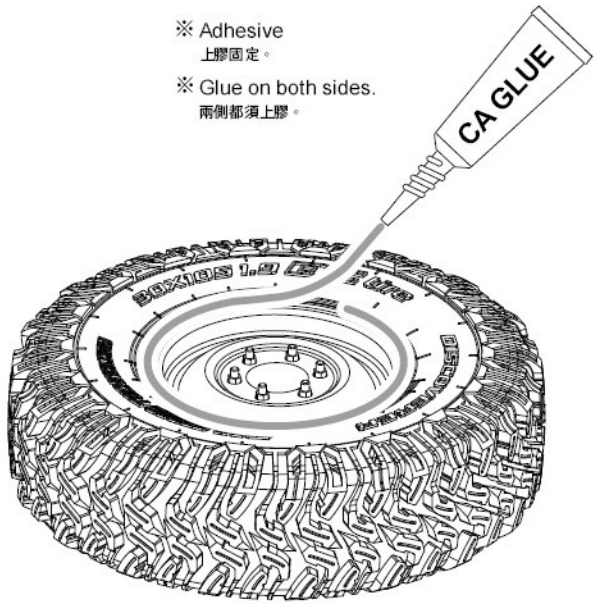

※ Please operate it at ventilated place.
請於通風處進行上膠。

X4
Make 4

STEP 2 Attaching wheels
安裝輪胎

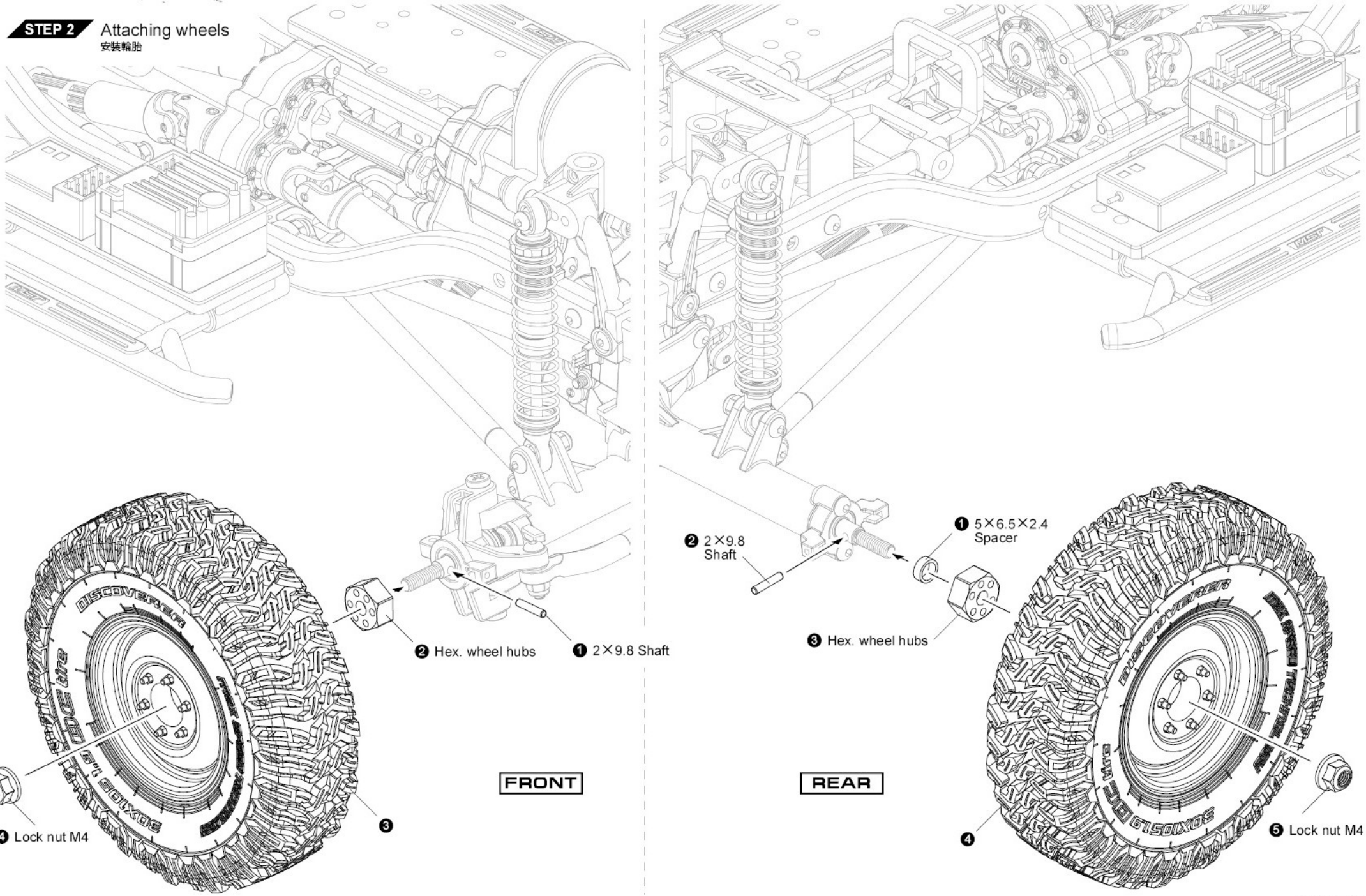

◀ BODY MOUNTS
車殼固定座

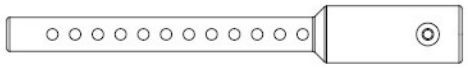

Body mount extension ×2
車殼延伸柱

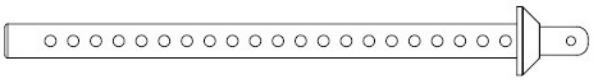

Body mount ×4
車殼支柱

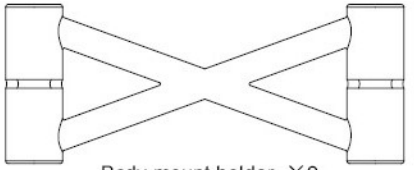

Body mount holder ×2
車殼支柱連接架



R-clip ×9
R形扣



M2×10 Screw ×6
圓頭螺絲

STEP 1 Attaching body mounts
安裝車殼固定座

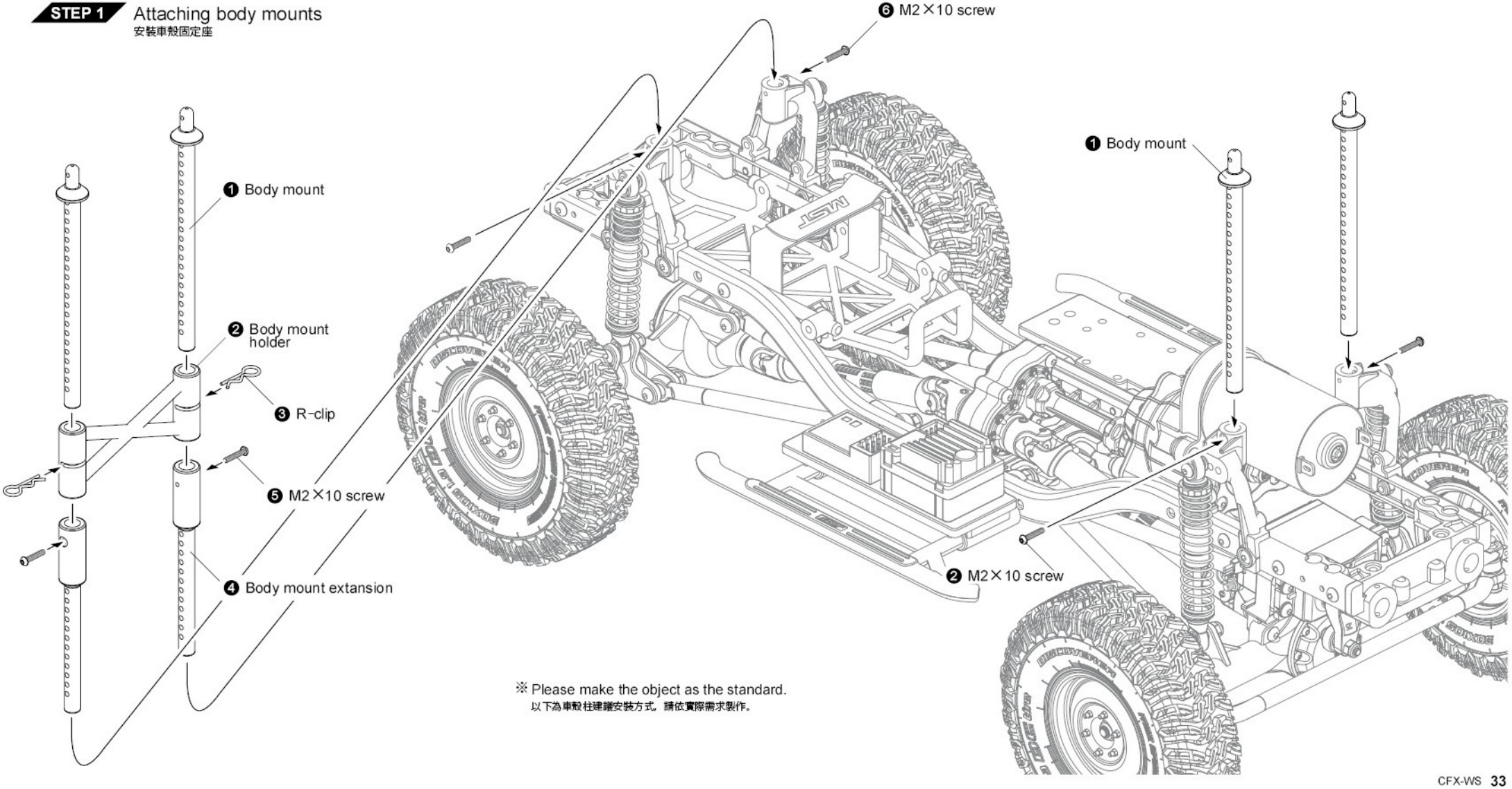

※ Please make the object as the standard.
以下為車殼柱連體安裝方式。請依實際需求製作。

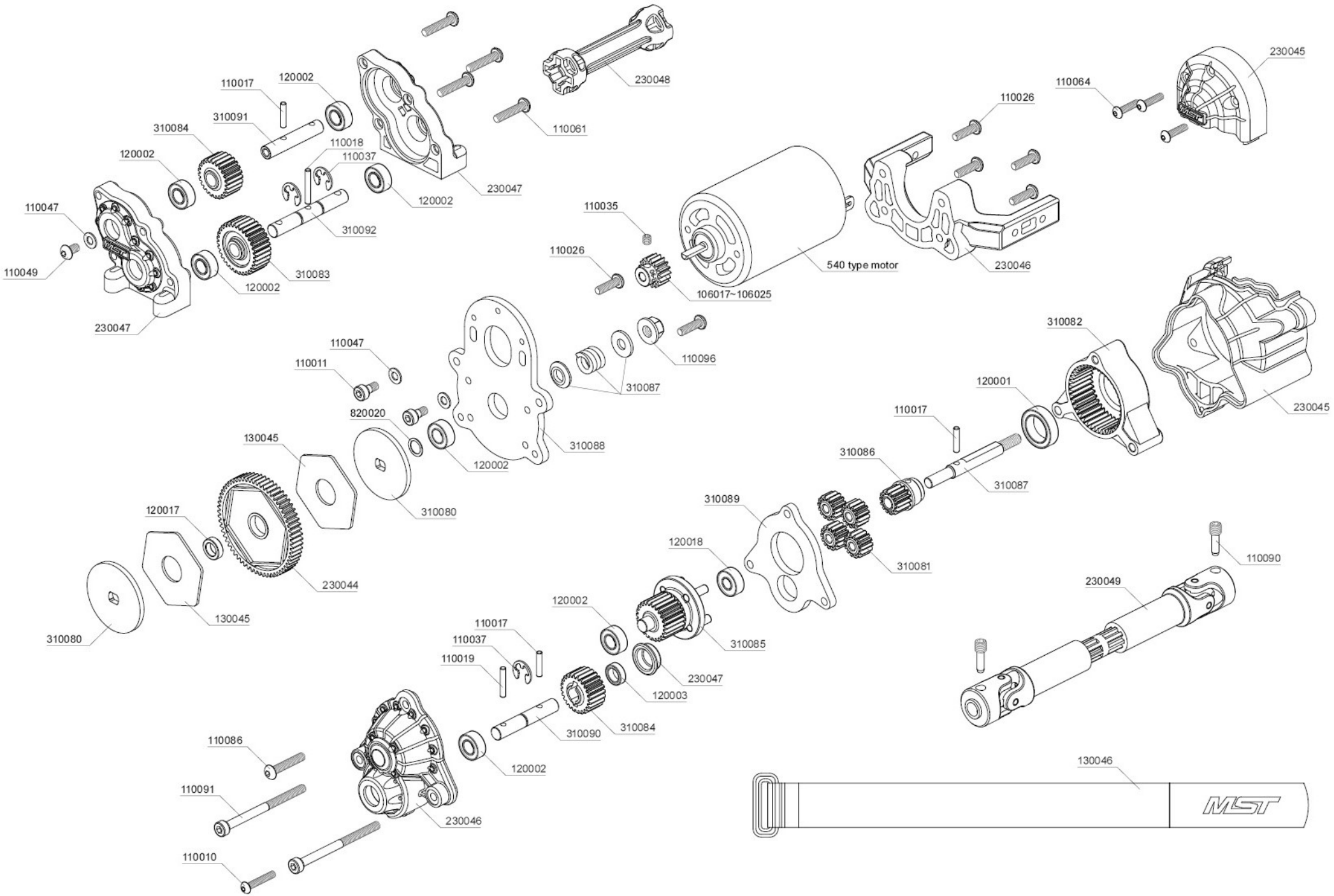
110017
120002
310091
310084
120002
110018
110037
230048
110061
230047
120002
310092
110047
110049
310083
120002
230047
110035
110026
106017~106025
540 type motor
110026
230046
230045
110064
110047
110011
820020
120002
310088
310087
110096
130045
310080
120017
230044
130045
310080
310082
120001
230045
110017
310086
310087
310089
120018
310081
110090
230049
120002
110017
110037
110019
310085
230047
120003
310090
310084
120002
110086
110091
110010
230046
130046
MST

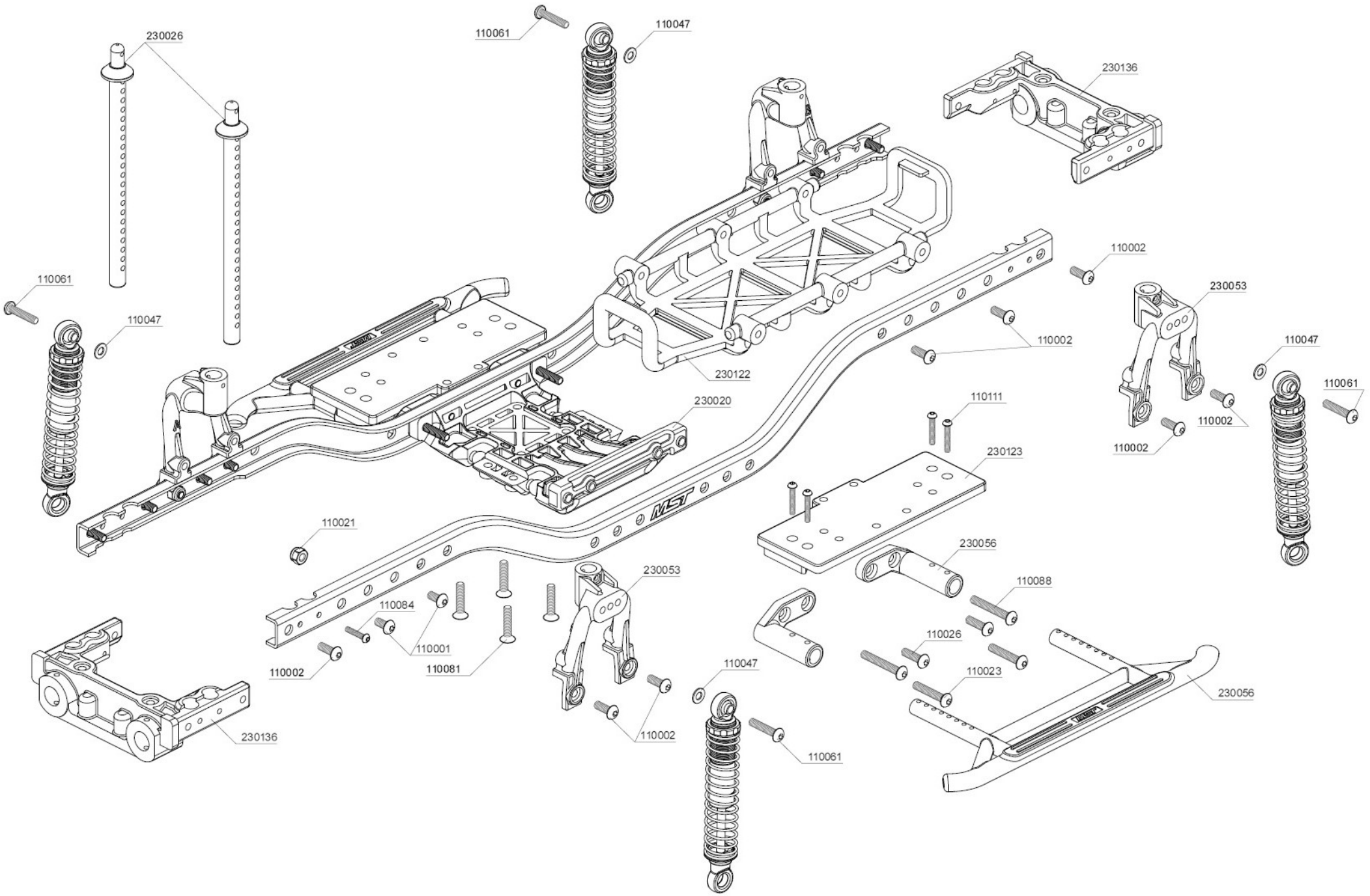
230026
110061
110047
230136
110061
110047
230122
230020
110002
230053
110002
110002
110111
230123
110002
110047
110061
110021
230056
110088
230053
110084
110001
110002
110081
110026
110023
230056
110047
110002
110061
230136

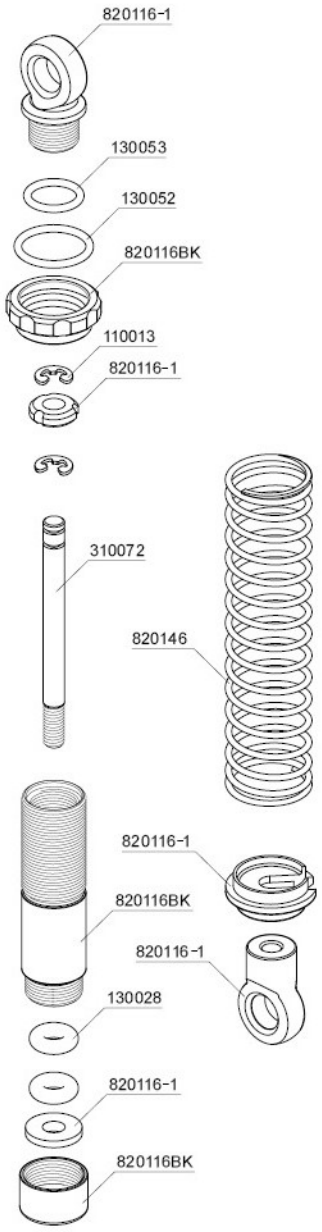
820116-1
130053
130052
820116BK
110013
820116-1
310072
820146
820116-1
820116BK
820116-1
130028
820116-1
820116BK

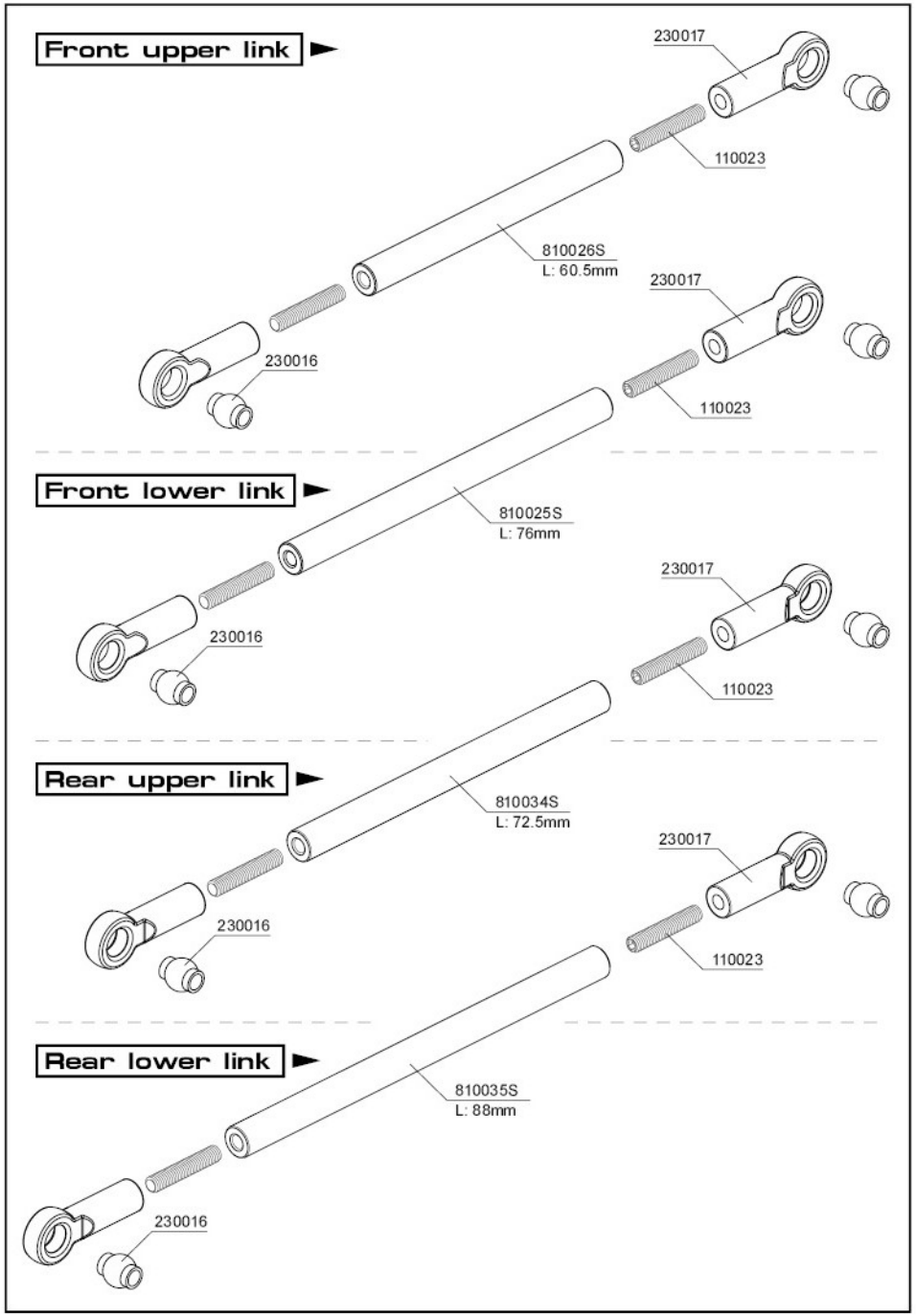
Front upper link
230017
110023
810026S
L: 60.5mm
230017
230016
110023
Front lower link
810025S
L: 76mm
230017
230016
110023
Rear upper link
810034S
L: 72.5mm
230017
230016
110023
Rear lower link
810035S
L: 88mm
230016

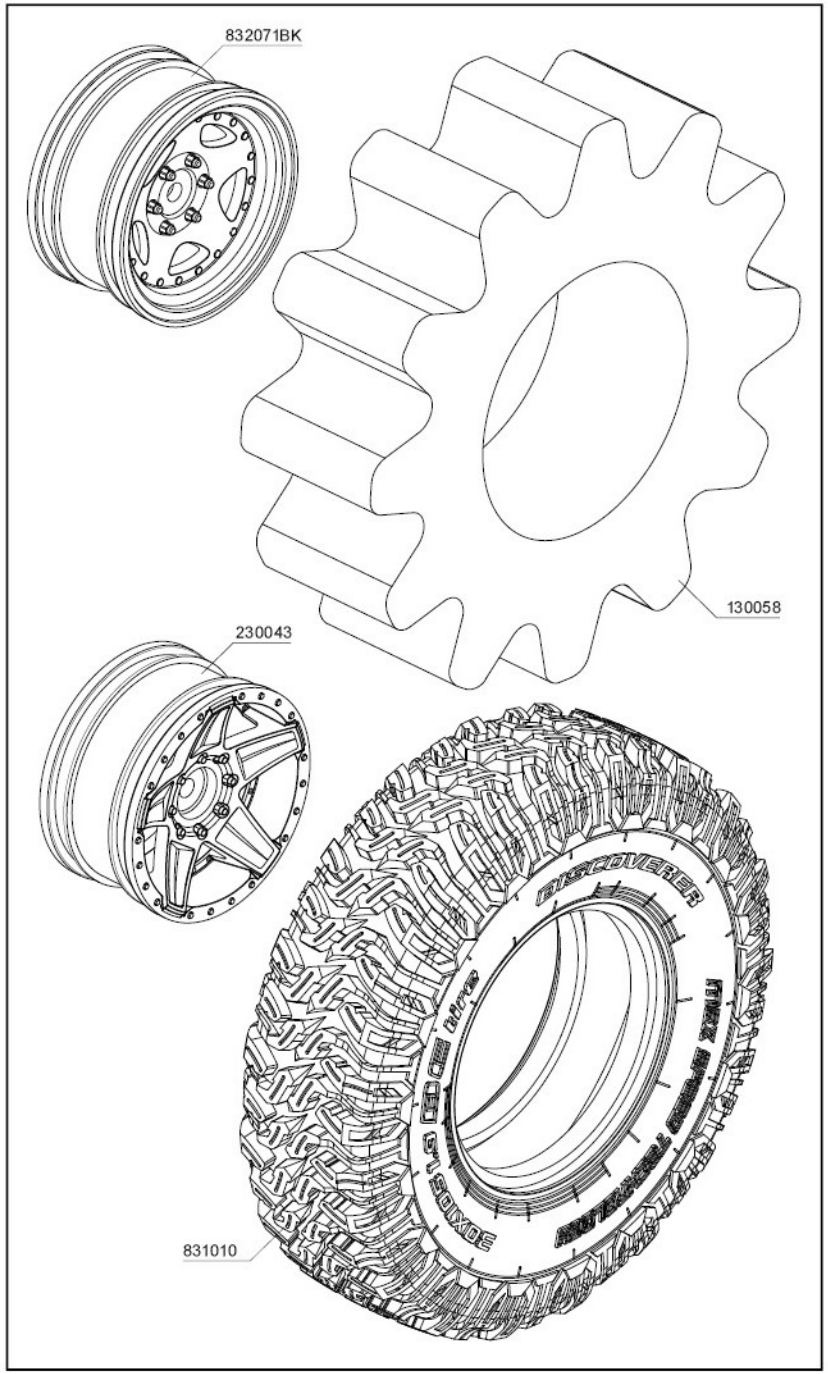
832071BK
130058
230043
831010

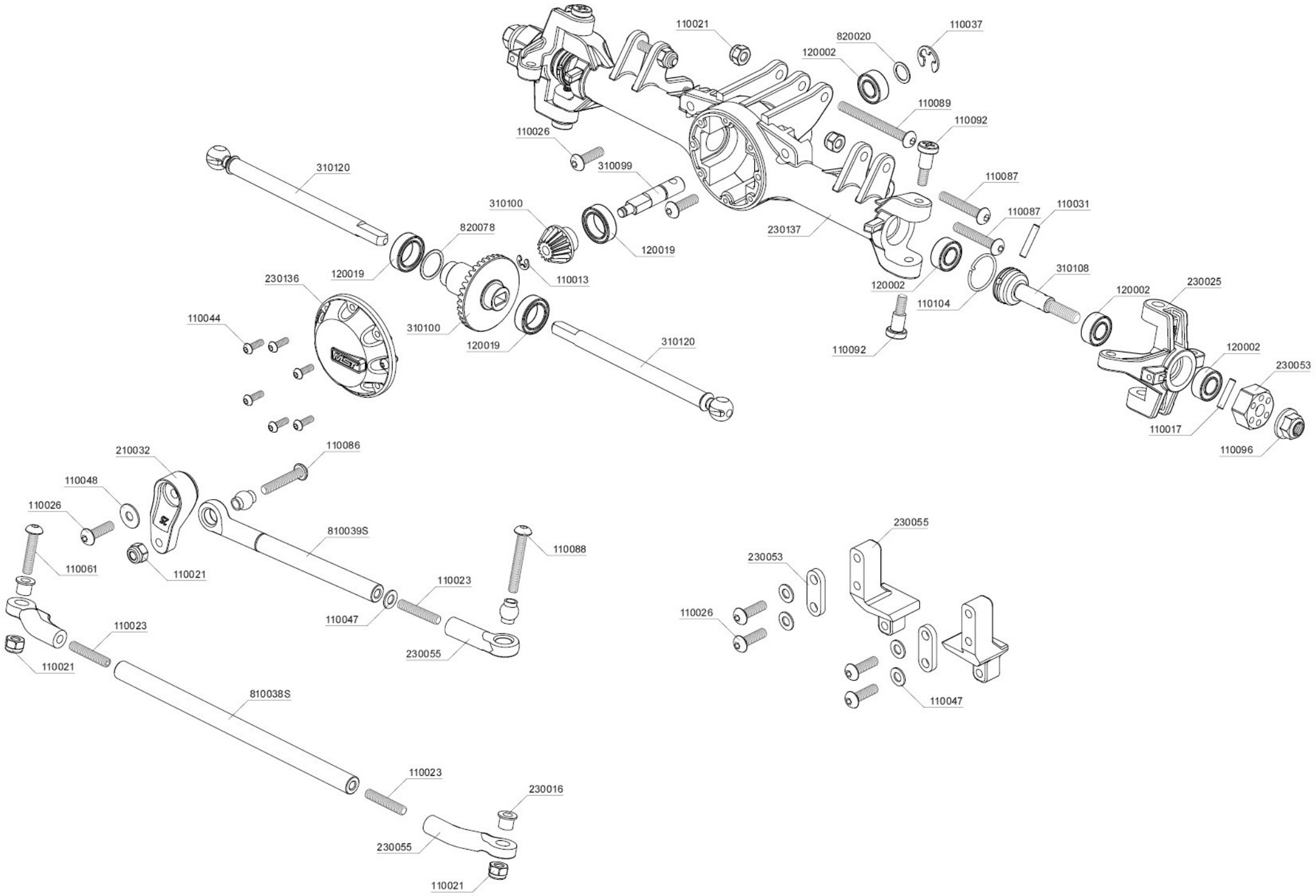
110021
820020
110037
120002
110089
110092
110026
310099
310120
110087
110087
110031
310100
820078
230137
120019
120019
110013
310108
120002
230025
230136
120002
110104
110044
310100
120019
310120
110092
120002
230053
110017
110096
210032
110086
110048
110026
810039S
110088
110061
110021
110023
110047
230055
110023
110021
810038S
110023
230016
230055
110021
230055
230053
110026
110047

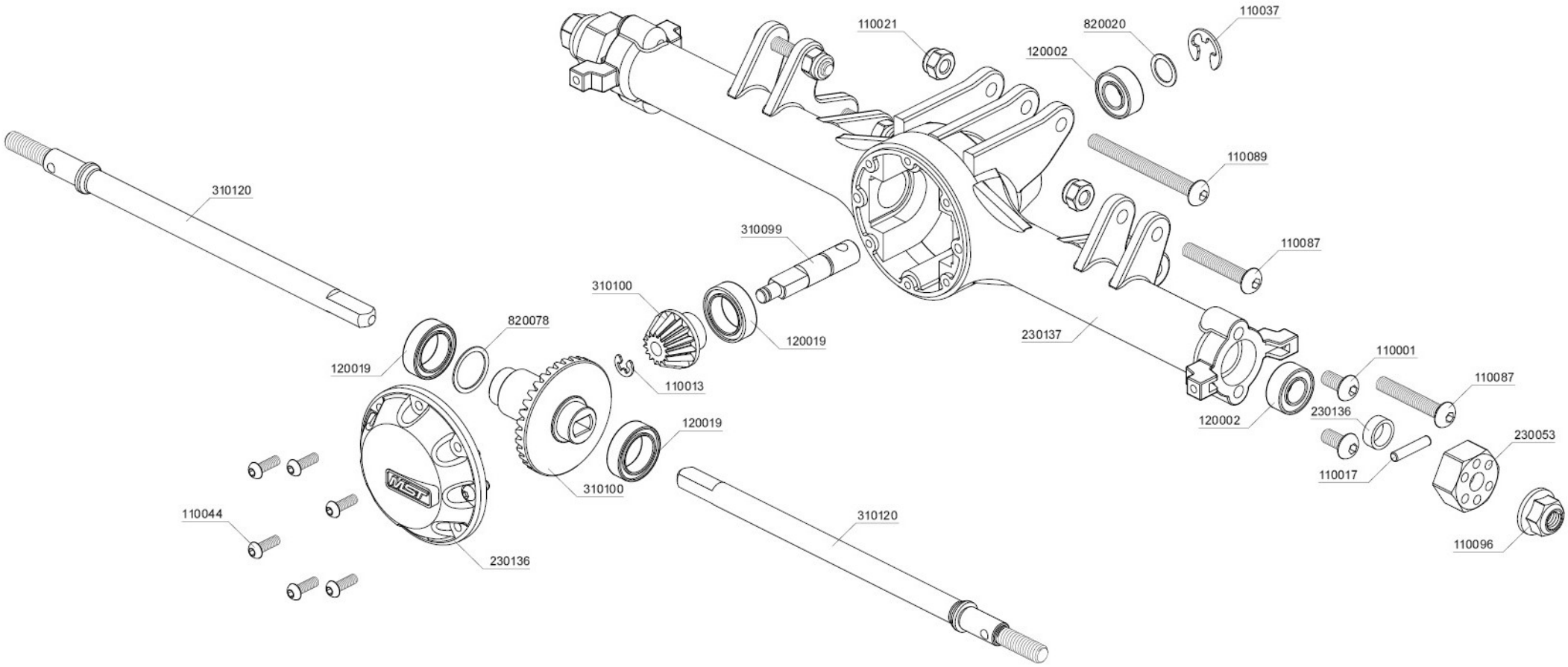
110021
820020
110037
120002
110089
310120
310099
110087
310100
820078
120019
120019
110013
230137
110001
110087
230136
120002
120019
230053
110017
310100
310120
110044
230136
110096

PARTS CODE

110001	Round head screw M3×6 (10)
110002	Round head screw M3×8 (10)
110010	Round head screw M2.5×14 (6)
110011	Cap screw M3×6 (6)
110013	E-clip 2.0 (10)
110016	R-clip 6.0 (10)
110017	Shaft 2×9.8 (10)
110018	Shaft 2×13.8 (5)
110019	Shaft 2×11.8 (5)
110021	Lock nut M3 (5)
110023	Set screw M3×16 (6)
110026	Round head screw M3×10 (10)
110031	Shaft 2X10.8 (10)
110035	Set screw M3×3 (6)
110037	E-clip 4.0 (10)
110044	Round head screw M2X6 (6)
110047	Spacer 3×6×0.5 (8)
110048	Spacer 3×8×0.5 (8)
110049	Round head screw M3×5 (10)
110061	Round head screw M3×14 (6)
110070	E-clip 3.0 (10)
110081	Countersunk screw M3×14 (6)
110084	Round head screw M2×10 (6)
110085	Round head screw M2×16 (6)
110086	Round head screw M3×16 (6)
110087	Round head screw M3×18 (6)
110088	Round head screw M3×20 (6)
110089	Round head screw M3×30 (6)
110090	Shaft screw M4×4×12 (6)
110091	Cap screw M3×40 (6)
110092	King pin screw (4)
110096	Lock nut M4 (5)
110104	G-clip 11.0 (10)
110111	Round head screw M2×12 (6)
120001	Ball bearing 10×15 (4)
120002	Ball bearing 5×10 (4)
120003	Ball bearing 5×8 (4)
120017	Bearing 5×8 (4)
120018	Ball bearing 4×10×4 (2)
120019	Ball bearing 8×12 (2)
130028	Damper O-ring P3 (blue) (10)
130045	Slipper pad (2)
130046	Velcro strap 16×210mm (2)
130052	O-ring 8.5×1 (4)
130053	O-ring 6×1 (4)
130058	Inner sponge 30×105×50 (2)
210032	Servo horn set (23T/25T)
230016	CMX Ball connector set
230020	CMX Gear box chassis set
230025	CMX Knuckle set
230026	CMX Car body post set
230043	648 1.9" wheel (+5) (4)
230044	M06 Spur gear 62T
230045	CFX Deceleration gear box set
230046	CFX Gear box support
230047	CFX Transfer case set
230048	CFX Driveshaft set
230049	CFX-W Driveshaft
230053	Damper stay set
230055	Rod ends set
230056	Side sliders set
230057	5.8 Rod ends set
230122	CFX-W Battery tray set
230123	CFX-W Side plates set
230136	Cross member & SA25 Differential cover set
230137	SA25 Axle cover set
310072	Piston rod (4)
310080	Slipper plate (2)
310081	Gear B 14T (4)
310082	Gear 42T
310083	Gear 32T
310084	Gear B 24T
310085	Gear A 24T
310086	Gear A 14T
310087	Slipper shaft set
310088	CFX Motor mount
310089	Bulkhead plate
310090	Gear shaft A
310091	Gear shaft B
310092	Gear shaft C
310093	CFX-W Chassis rail
310099	Bevel gear shaft
310100	Bevel gear set 36-15
310108	Wheel axle (2)
310120	SA25 CVA axle (2)
310121	SA25 Rear axle (2)
810025S	Alum. link 76mm (silver) (2)
810026S	Alum. link 60.5mm (silver) (2)
810034S	Alum. link 72.5mm (silver) (2)
810035S	Alum. link 88mm (silver) (2)
810038S	Alum. link 103mm (silver) (2)
810039S	Alum. link 48.5mm (silver) (2)
820020	Spacer 5×7×0.3 (8)
820078	Spacer 8×10×0.3 (8)
820116BK	TC70 Alum. damper set (black) (4)
820116-1	Damper plastic maintenance set (2)
820146	50mm TC coil spring set (6)
831010	DC Crawler tire 30×105-1.9" (soft-30°) (2)
832071BK	Black 236 wheel (+5) (4)

部品編號

110001	六角半圓頭螺絲 M3×6 (10)
110002	六角半圓頭螺絲 M3×8 (10)
110010	六角半圓頭螺絲 M2.5×14 (6)
110011	六角有頭螺絲 M3×6 (半牙) (6)
110013	E扣 2.0 (10)
110016	R銷 6.0 (10)
110017	插銷 2×9.8 (10)
110018	插銷 2×13.8 (5)
110019	插銷 2×11.8 (5)
110021	防鬆螺帽 M3 (5)
110023	六角止付螺絲 M3×16 (6)
110026	六角半圓頭螺絲 M3×10 (10)
110031	插銷 2X10.8 (10)
110035	六角止付螺絲 M3×3 (6)
110037	E扣 4.0 (10)
110044	六角半圓頭螺絲 M2X6 (6)
110047	墊片 3×6×0.5 (8)
110048	墊片 3×8×0.5 (8)
110049	六角半圓頭螺絲 M3×5 (10)
110061	六角半圓頭螺絲 M3×14 (6)
110070	E扣 3.0 (10)
110081	六角沉頭螺絲 M3×14 (6)
110084	六角半圓頭螺絲 M2×10 (6)
110085	六角半圓頭螺絲 M2×16 (6)
110086	六角半圓頭螺絲 M3×16 (6)
110087	六角半圓頭螺絲 M3×18 (6)
110088	六角半圓頭螺絲 M3×20 (6)
110089	六角半圓頭螺絲 M3×30 (6)
110090	銷釘螺絲 M4×4×12 (6)
110091	六角有頭螺絲 M3×40 (半牙) (6)
110092	大王螺絲 (4)
110096	防鬆螺帽 M4 (5)
110104	G扣 11.0 (10)
110111	六角半圓頭螺絲 M2×12 (6)
120001	培林 10×15 (4)
120002	培林 5×10 (4)
120003	培林 5×8 (4)
120017	軸承 5×8 (4)
120018	培林 4×10×4 (2)
120019	培林 8×12 (2)
130028	阻尼器O環 P3 (藍) (10)
130045	扭限摩擦片 (2)
130046	電池束帶 16×210mm (2)
130052	O環 8.5X1 (4)
130053	O環 6×1 (4)
130058	內襯 30×105×50 (2)
210032	伺服機舵片組 (23T/25T)
230016	CMX 球頭組
230020	CMX 減速箱底盤組
230025	CMX 轉向座組
230026	CMX 車殼支柱組
230043	648 1.9" 輪框 (+5) (4)
230044	M06 大齒盤 62T
230045	CFX 減速箱組
230046	CFX 減速箱支架組
230047	CFX 分動箱組
230048	CFX 驅動軸組
230049	CFX-W 傳動軸
230053	避震架組
230055	拉桿頭組
230056	車側踏板組
230057	5.8 拉桿頭組
230122	CFX-W 電池盒組
230123	CFX-W 電裝托盤組
230136	橫樑 & 車軸蓋組
230137	SA25 車軸殼組
310072	避震軸心 (4)
310080	扭限墊盤
310081	齒輪 B 14T (4)
310082	齒輪 42T
310083	齒輪 32T
310084	齒輪 B 24T
310085	齒輪 A 24T
310086	齒輪 A 14T
310087	扭限軸心組
310088	CFX 馬達座
310089	減速箱艙板
310090	齒輪軸心 A
310091	齒輪軸心 B
310092	齒輪軸心 C
310093	CFX-W 大樑 (2)
310099	傘齒軸
310100	傘齒組 36-15
310108	萬向接杯 (2)
310120	SA25 CVA 輪軸 (2)
310121	SA25 後輪軸 (2)
810025S	鋁合金拉桿 76mm (銀) (2)
810026S	鋁合金拉桿 60.5mm (銀) (2)
810034S	鋁合金拉桿 72.5mm (銀) (2)
810035S	鋁合金拉桿 88mm (銀) (2)
810038S	鋁合金拉桿 103mm (銀) (2)
810039S	鋁合金拉桿 48.5mm (銀) (2)
820020	墊片 5×7×0.3 (8)
820078	墊片 8×10×0.3 (8)
820116BK	TC70 鋁合金避震器組 (黑) (4)
820116-1	避震膠件組 (2)
820146	50mm TC 避震彈簧組 (6)
831010	DC 攀岩胎 30×105-1.9" (軟-30°) (2)
832071BK	黑色236輪框 (+5) (4)

MST

max speed technology

CFX-WS OFF ROAD

RC 4WD HIGH PERFORMANCE OFF ROAD CAR

INSTRUCTION MANUAL

WWW.RC-MST.COM

[facebook.com/MST.tw]

Max Speed Technology

PRINTED WITH SOY INK

026230