CFX-W5

OFF ROAD

RC 4WD HIGH PERFORMANCE OFF ROAD CAR

MST

max SPEED TECHNOLOGY

READY-TO-RUN RTR

MST OWNERS CLUB ADVENTURES OFF-ROAD MST

4X4 OFF ROAD

EXPLODED MANUAL



CREEK MUD FOREST ROCKY SNOW SAND

WHEELBASE : Varied by The Car Body
WIDTH : 224mm
GEAR RATIO = 1:31.7~1:46.7
TIRE WIDTH / DIAMETER : 30×105mm
Shaft-Driven Full-Time 4WD
Front and Rear SA25 Axle

WWW.RC-MST.COM

※SPECIFICATION ARE SUBJECT TO CHANGE WITHOUT NOTICE

CFX-WS

RC 4WD HIGH PERFORMANCE OFF ROAD CAR

READY-TO-RUN RTR

MST MAX SPEED TECHNOLOGY

Appreciate for your choice of **CFX-WS RTR**! You will be impressed with its performance and beauty.
Please prepare additional parts as car battery, transmitter battery, and charger.
Please read the manuals for the electronics setting and operations.
If you have doubt or need assistance, please contact the purchased shop or hobby shop for help, many thanks!

首先感謝你購入 **CFX-WS RTR** 這項產品，您將擁有一部兼具性能與美型的攀岩車。
在首次操作前，有以下幾項須要另行購置的物件：車用電池、遙控器用電池、充電器。
備妥上述物件後，並詳閱各說明書。
如需其他協助，請向原購買店家，或遙控模型店詢問！謝謝！

PLEASE FOLLOW BELOW OPERATIONS BEFORE OPERATION. 請於使用前, 執行以下操作

❶ Install transmitter batteries.	❶ 安裝遙控器電池
❷ Connector ESC and battery.	❷ 聯結車用電池與電子變速器
❸ Switch on the transmitter.	❸ 打開遙控器電源
❹ Trims the transmitter in neutral.	❹ 調整遙控器各微調器至中立點
❺ Switch on the ESC.	❺ 打開電子變速器電源
❻ Completed.	❻ 完成

※ Please play this product in opening or safety area.
請於空曠或安全無虞的場所，使用本項產品。



※ Please refer to instruction of transmitter & receiver performance.
遙控器&接收機功能說明請參閱詳細說明書。



※ Please refer to instruction of ESC performance.
電子變速器功能說明請參閱詳細說明書。

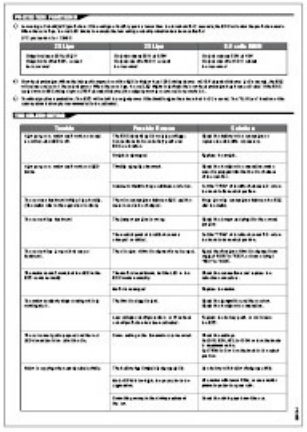

FACTORY ELECTRONIC SETTING
原廠電裝配線圖

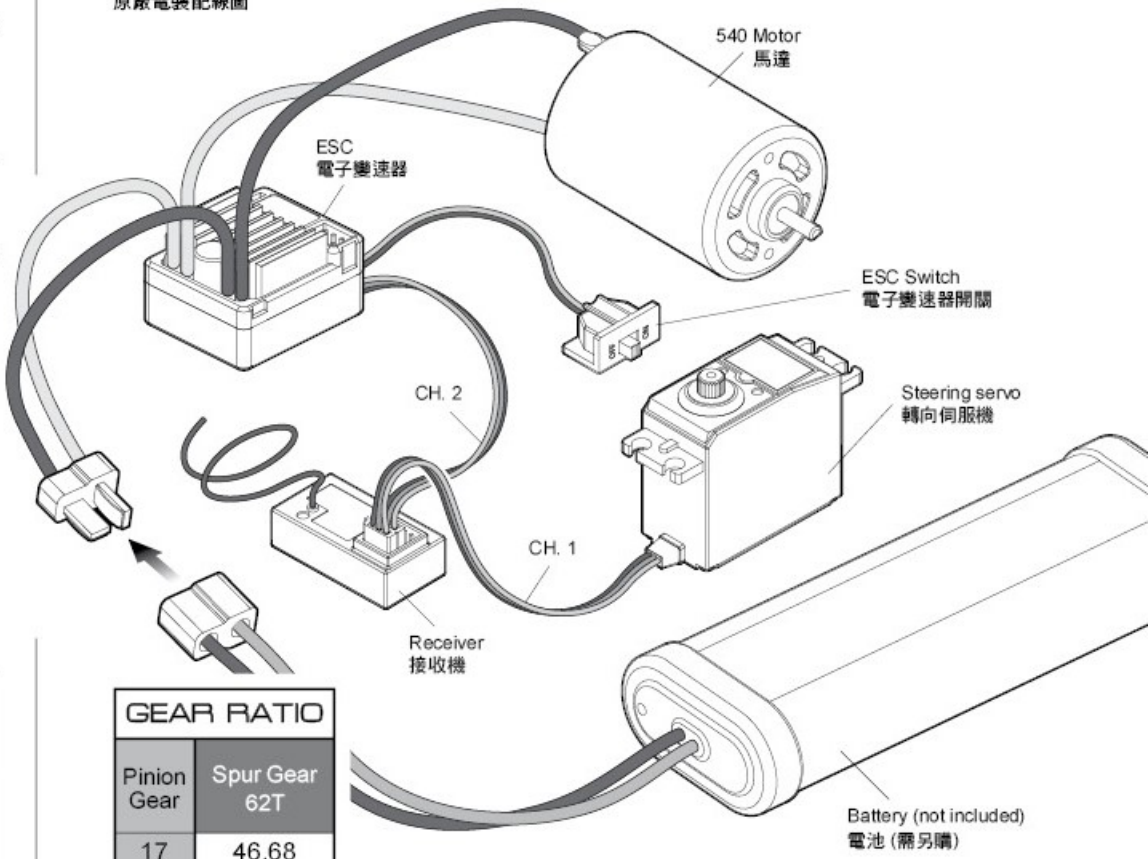

GEAR RATIO	
Pinion Gear	Spur Gear 62T
17	46.68
18	44.09
19	41.77
20	39.69
21	37.79
22	36.07
23	34.50
24	33.06
25	31.74

◄ ATTACHING BATTERY
安裝電池

※ The assembly and conservation method may be different by specification of battery.
電池的安裝方式會因為廠牌規格而有些微差異，
電池的使用方式與保存方式，也會因電池種類
而有所不同。

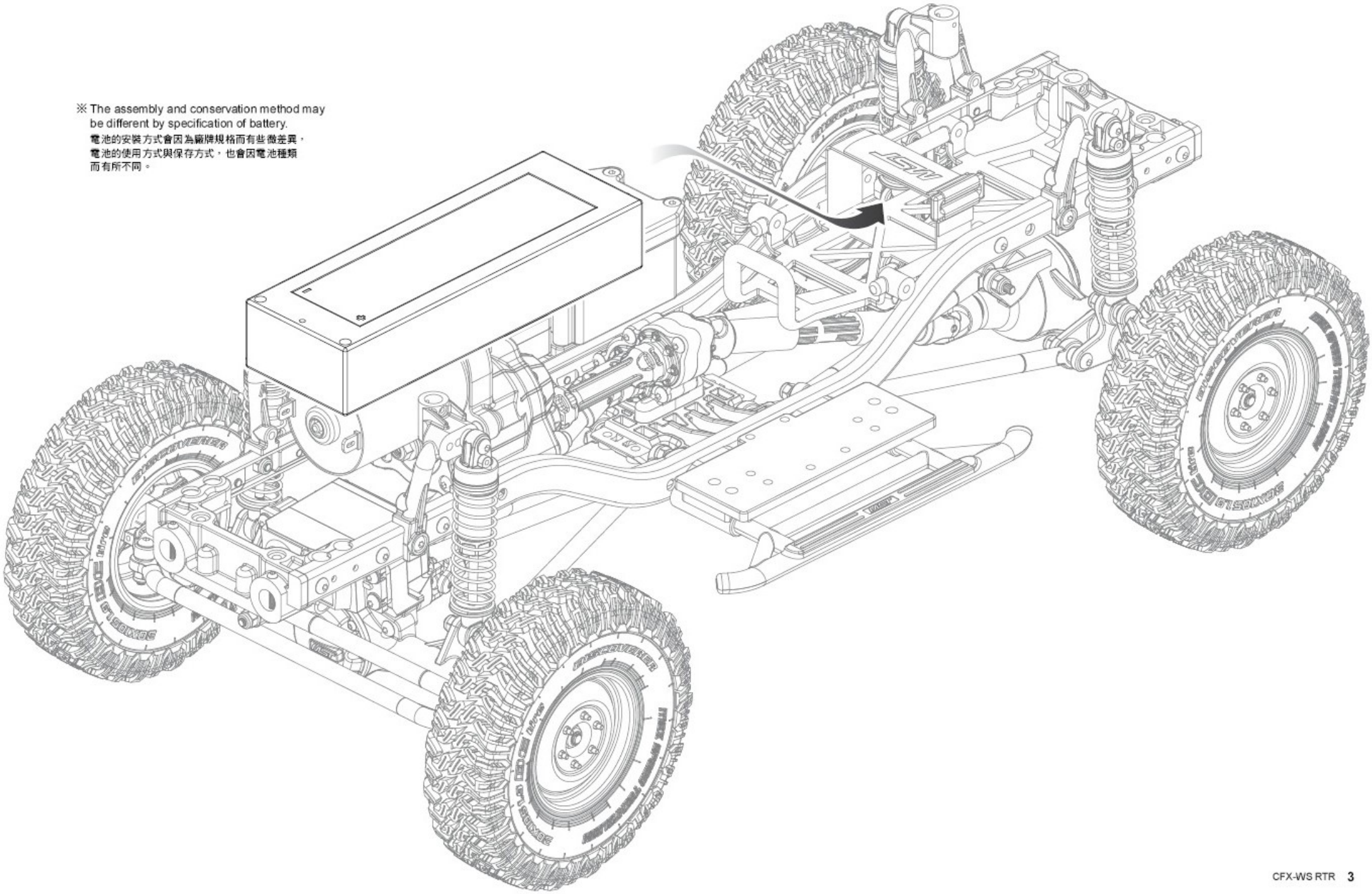

CFX-WS OFF ROAD
RC 4WD HIGH PERFORMANCE OFF ROAD CAR
READY-TO-RUN RTR
EXPLODED MANUAL

MST max speed technology

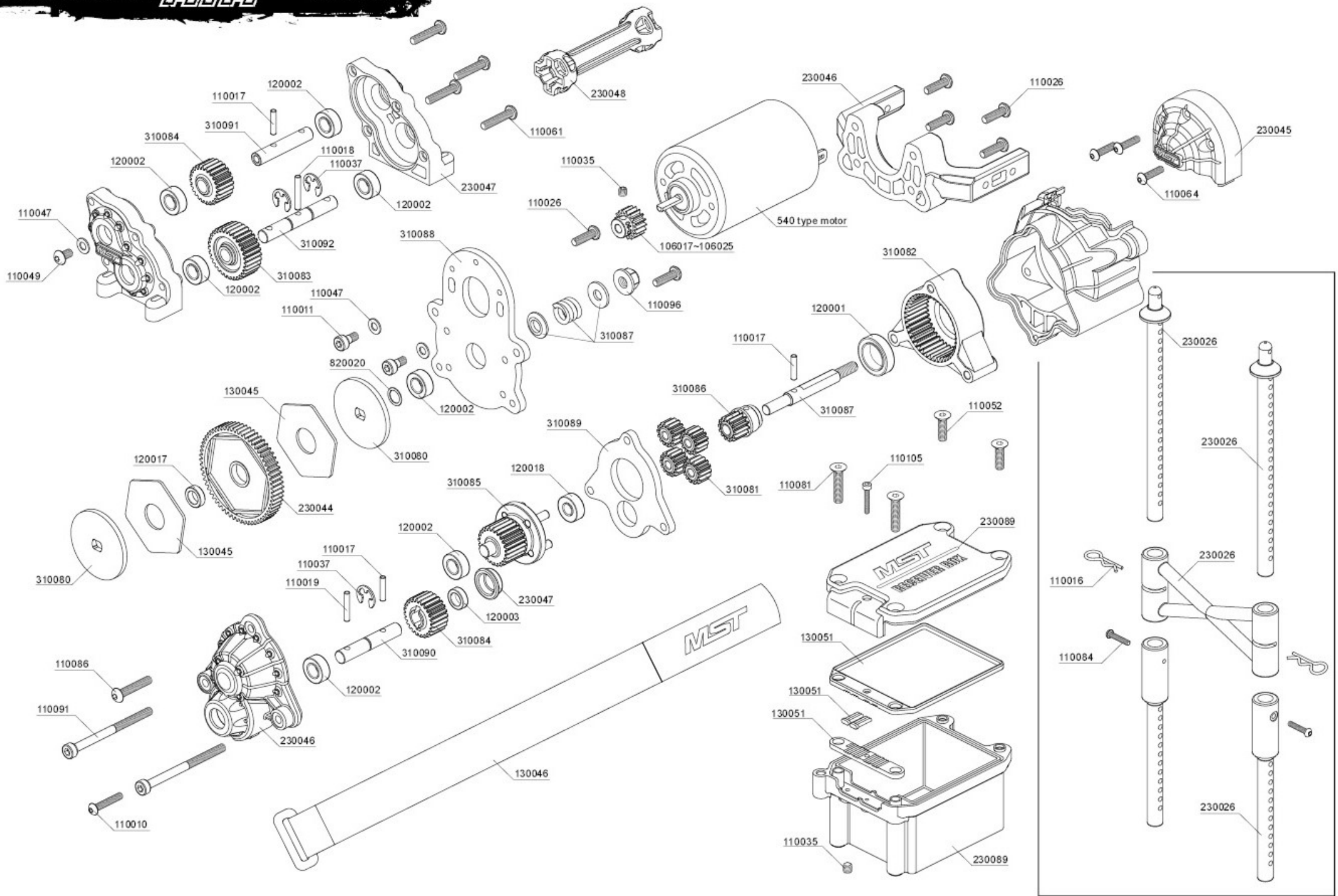

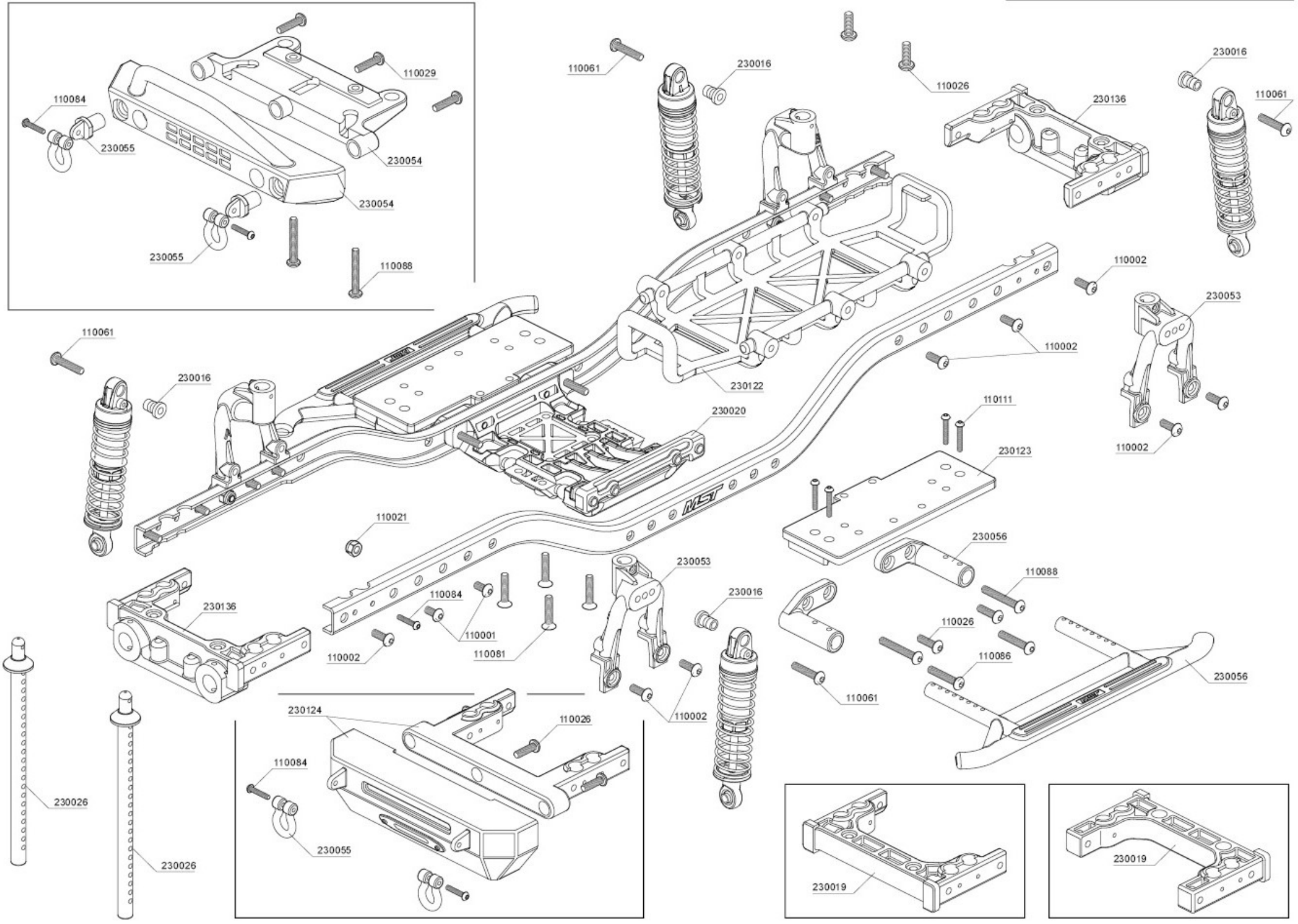
110084
230055
110029
230054
230054
230055
110088
110061
230016
110026
230136
230016
110061
110061
230016
230020
230122
110002
230053
110002
110111
230123
110002
110021
230136
110084
110001
110081
110002
230053
230016
230056
110088
110026
110086
110061
230056
230026
230026
230124
110026
110084
230055
230019
230019

CFX-WS OFF ROAD
RC 4WD HIGH PERFORMANCE OFF ROAD CAR
READY-TO-RUN RTR
EXPLODED MANUAL

MST max speed technology

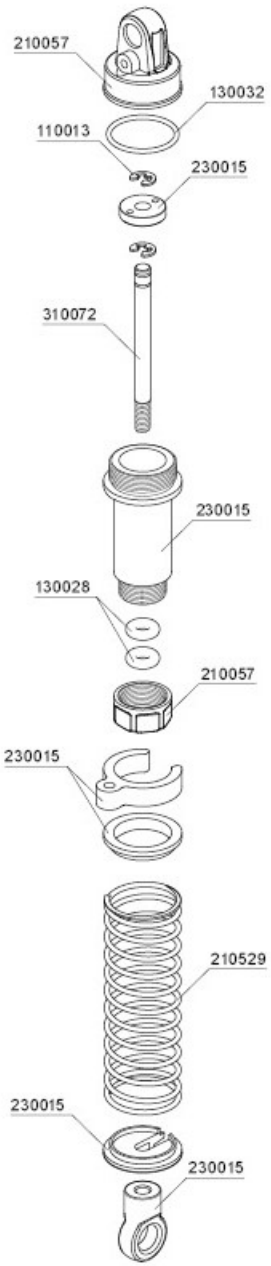

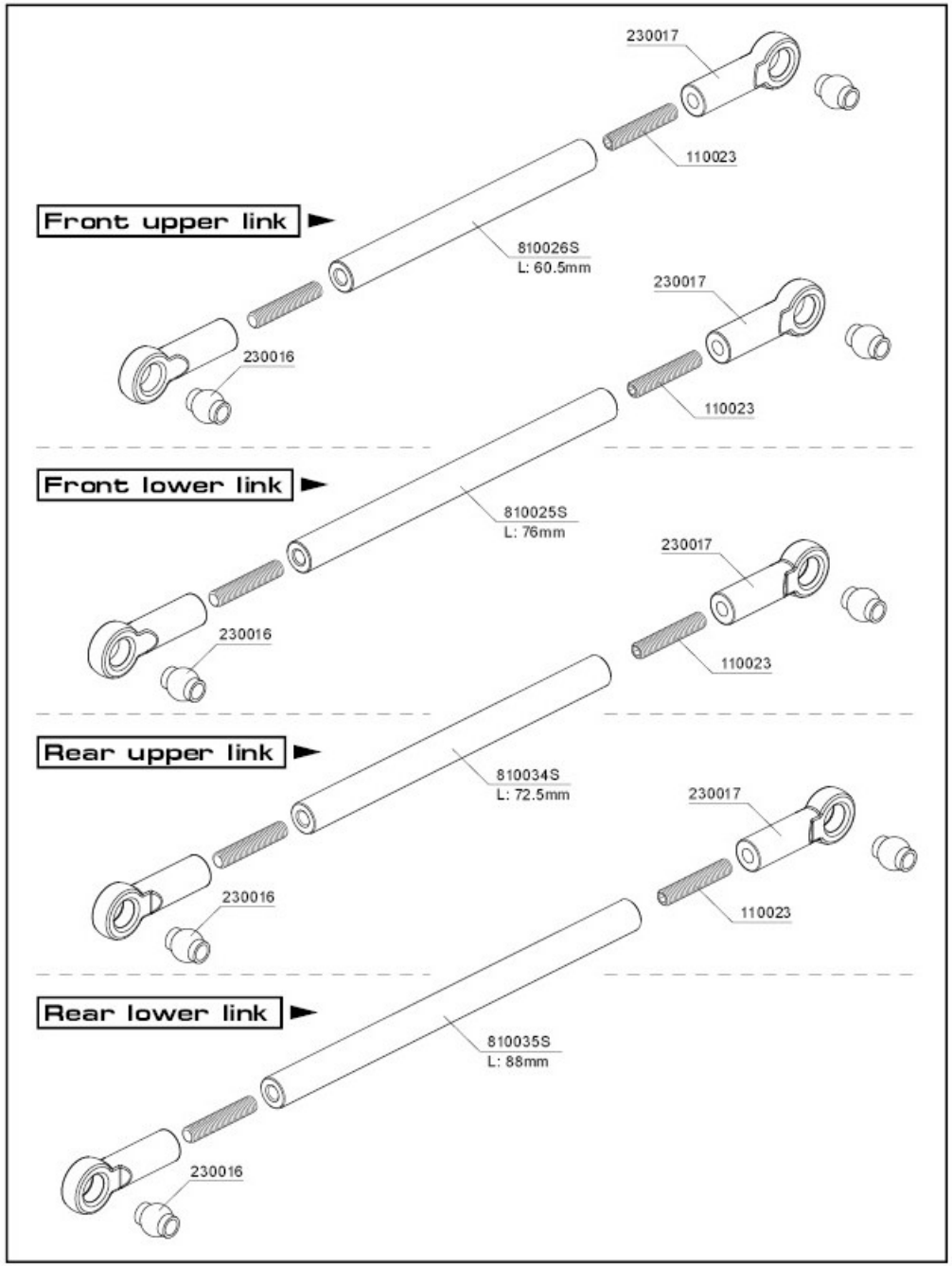

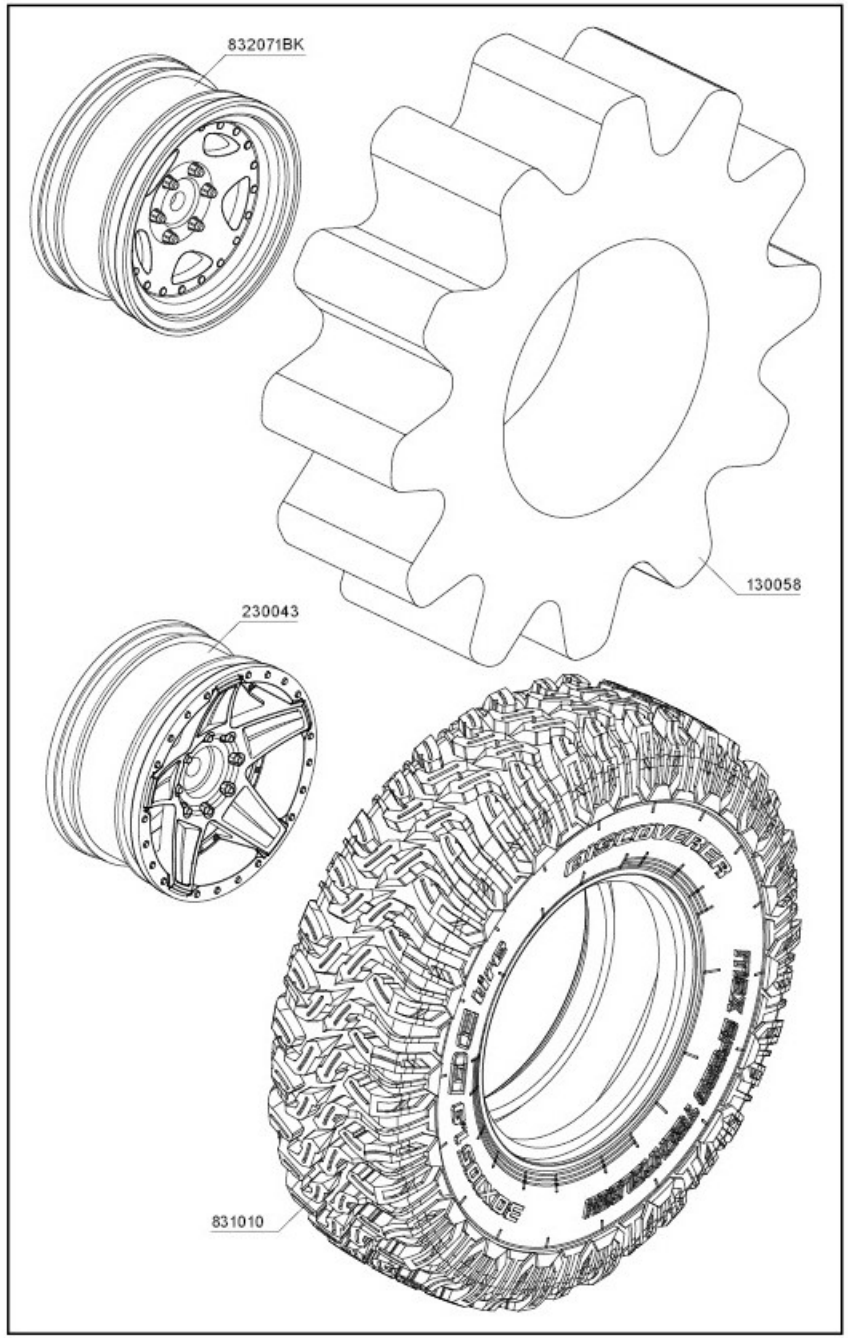

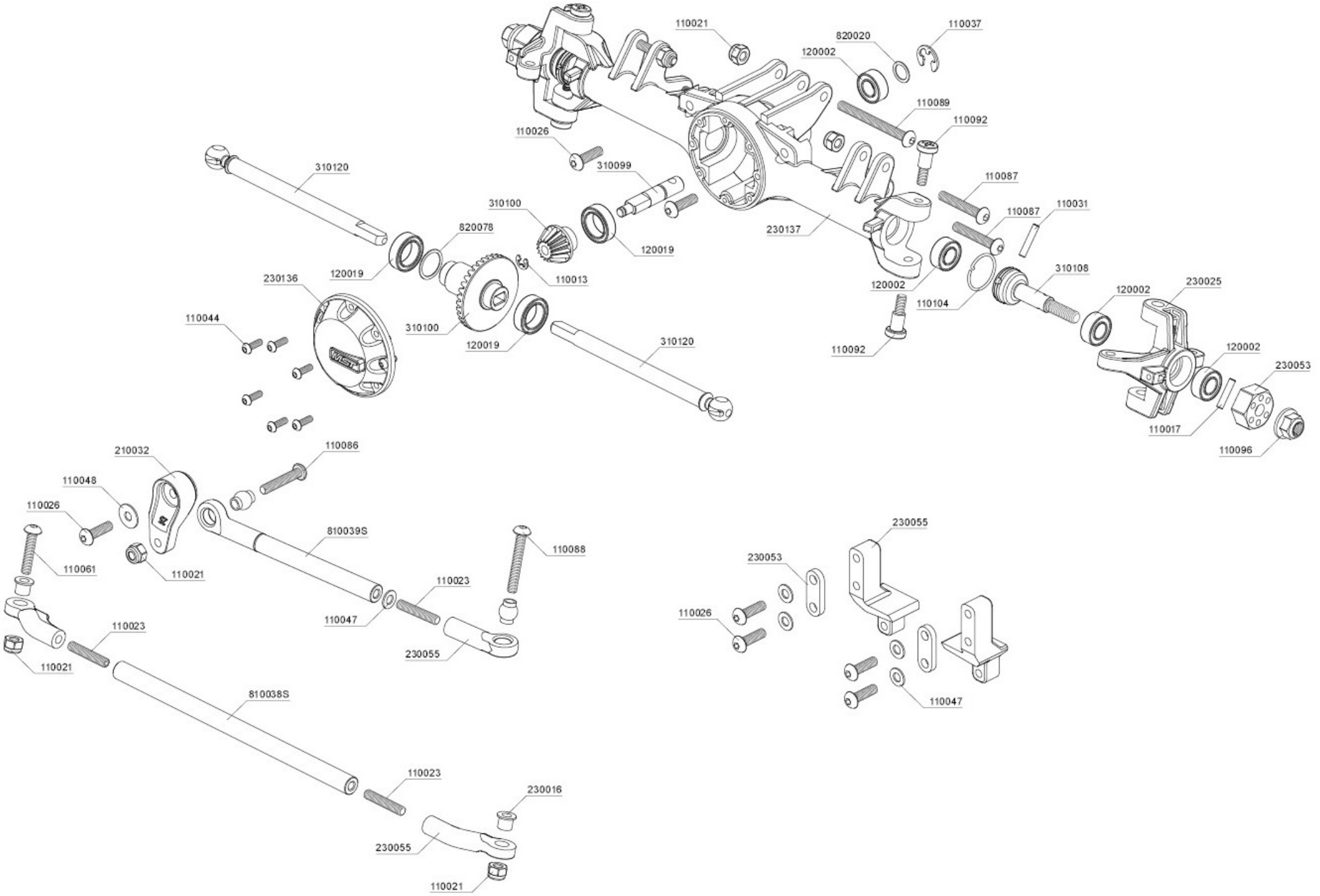
110021
820020
110037
120002
110089
110092
110026
310120
310099
110087
310100
110087
110031
820078
230137
120019
120019
110013
310108
230136
120002
230025
110104
110044
310100
120019
310120
110092
120002
230053
110017
110096
210032
110086
110048
110026
810039S
110088
230055
110061
110021
230053
110023
110026
110047
110023
230055
110021
810038S
110047
110023
230016
230055
110021

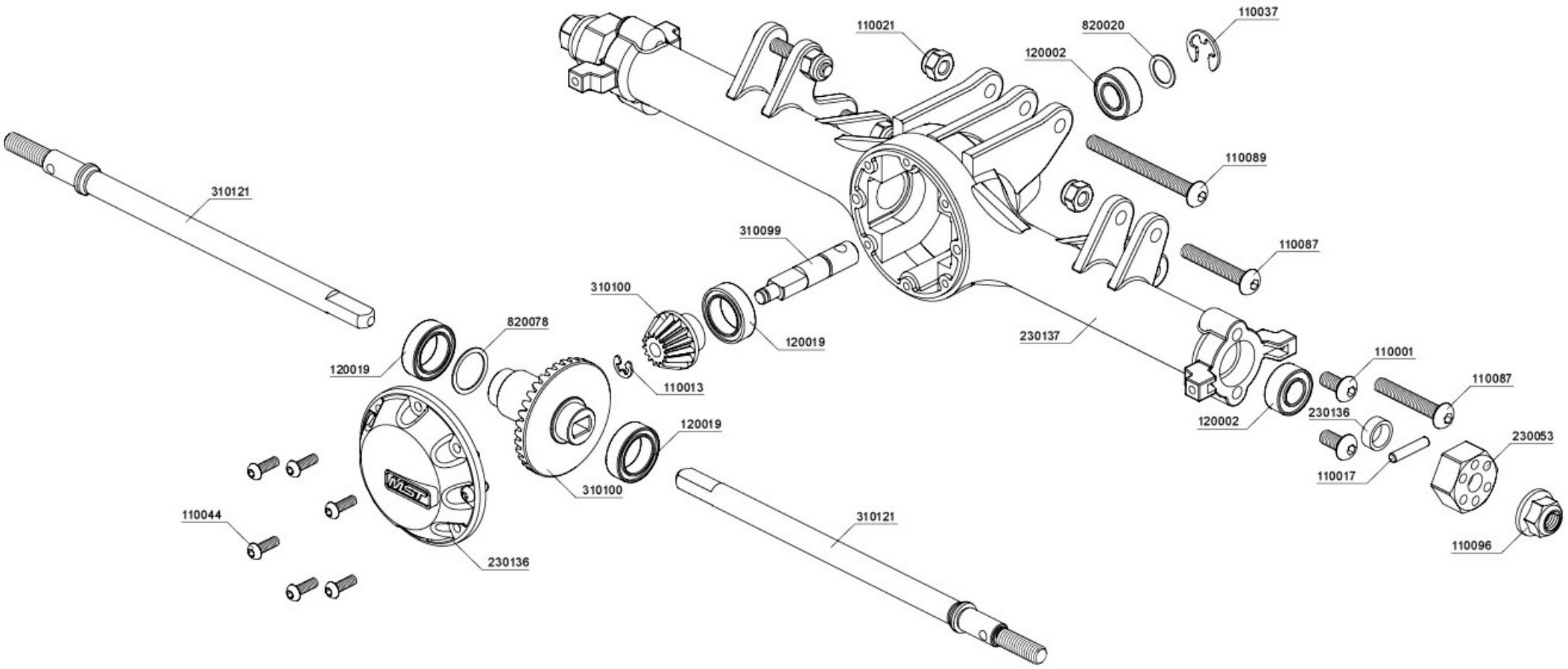
110021
820020
110037
120002
110089
310121
310099
110087
310100
120019
230137
820078
120019
110013
110001
110087
230136
120002
120019
230053
110017
310100
310121
110044
230136
110096

PARTS



M2×6 screw ×12
圓頭螺絲
110044



M2×10 screw ×9
圓頭螺絲
110084



M2×12 screw ×8
圓頭螺絲
110111



M2×16 screw ×4
圓頭螺絲
110085



M2.5×14 screw ×1
圓頭螺絲
110010



M3×5 screw ×1
圓頭螺絲
110049



M3×6 screw ×10
圓頭螺絲
110001



M3×8 screw ×17
圓頭螺絲
110002



M3×10 screw ×16
圓頭螺絲
110026



M3×14 screw ×9
圓頭螺絲
110061



M3×16 screw ×6
圓頭螺絲
110086



M3×18 screw ×8
圓頭螺絲
110087



M3×20 screw ×5
圓頭螺絲
110088



M3×30 screw ×2
圓頭螺絲
110089



M3×14 screw ×4
沉頭螺絲
110081



M3×6 Cap screw ×2
有頭螺絲
110011



M3×40 Cap screw ×2
有頭螺絲
110091

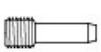

Shaft screw ×4
銷釘螺絲
110090



King pin screw ×4
大王螺絲
110092



M3×3 screw ×1
止付螺絲
110035



M3×16 screw ×20
止付螺絲
110023



2×9.8 Shaft ×7
插銷
110017



2×10.8 Shaft ×2
插銷
110031



2×11.8 Shaft ×2
插銷
110019



2×13.8 Shaft ×1
插銷
110018



3×6×0.5 Spacer ×13
墊片
110047



3×8×0.5 Spacer ×1
墊片
110048



5×7×0.3 Spacer ×3
墊片
820020

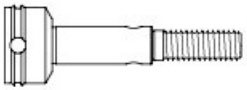

Wheel axle ×2
萬向接杆
310108

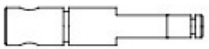

Bevel gear shaft ×2
小傘齒軸
310099



Gear Shaft B ×1
齒輪軸心B
310091



Gear Shaft A ×1
齒輪軸心 A
310090



Gear Shaft C ×1
齒輪軸心 C
310092

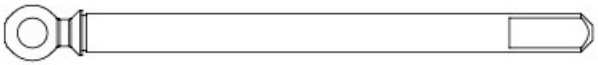

SA25 CVA axle ×2
SA25 CVA 輸軸
310120



SA25 Rear axle ×2
SA25 後傳動軸
310121

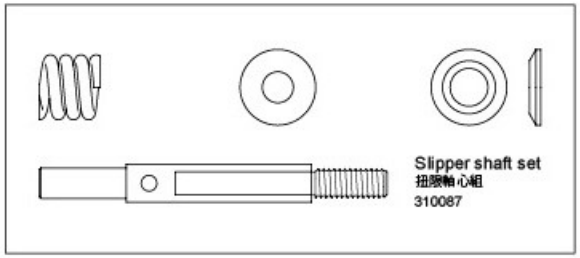

Slipper shaft set
扭矩軸心組
310087



R-clip ×9
R形扣
110016



G-clip 11.0 ×2
G扣
110104



Lock nut M3 ×21
防鬆螺帽
110021



Lock nut M4 ×5
防鬆螺帽
110096

Gear B 14T ×4
齒輪 B 14T
310081

Gear B 24T ×2
齒輪 B 24T
310084

Gear 32T ×1
齒輪 32T
310083

8×10×0.3 Spacer ×2
墊片
820078

5×8×2.5 Bearing ×1
軸承
120017

4×10×4 Ball bearing ×1
培林
120018

5×8×2.5 Ball bearing ×1
培林
120003

5×10×4 Ball bearing ×17
培林
120002

8×12×3.5 Ball bearing ×6
培林
120019

10×15×4 Ball bearing ×1
培林
120001

E-clip 2.0 ×12
E扣
110013

E-clip 4.0 ×5
E扣
110037

Gear A 14T ×1
齒輪 A 14T
310086

Gear A 24T ×1
齒輪 A 24T
310085

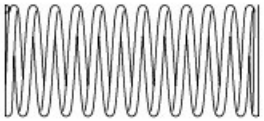

Coil spring 45mm (hard)(silver) ×4
避震彈簧 45mm (硬)(銀)
210529



Piston rod ×4
避震軸心
310072



Damper cylinder ×4
避震筒身
230015



Piston ×4
活塞
230015

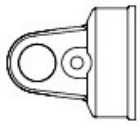

Cylinder cap ×4
避震器上蓋
210057



Spring spacer ×4
彈簧調整扣 1mm
230015



Rod guide cap ×4
避震器下蓋
210057



Damper retainer ×4
避震器彈簧座
230015



Spring spacer ×4
彈簧調整扣 2mm
230015



Spring holder ×4
彈簧托環
230015

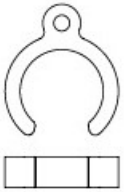

Spring spacer ×4
彈簧調整扣 4mm
230015

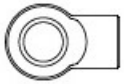

Damper adjuster ×4
避震器拉桿
230015



10.8×0.9 O-ring ×4
O環
130032



Damper O-ring P3 ×8
避震器O環
130028

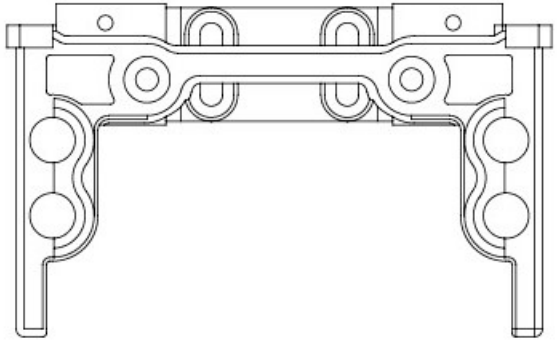

Crossmember & SA25 Differential cover set ×2
橫桿 & 車軸蓋組
230136





CFX-W Battery tray set
CFX-W 電池盒組
230122

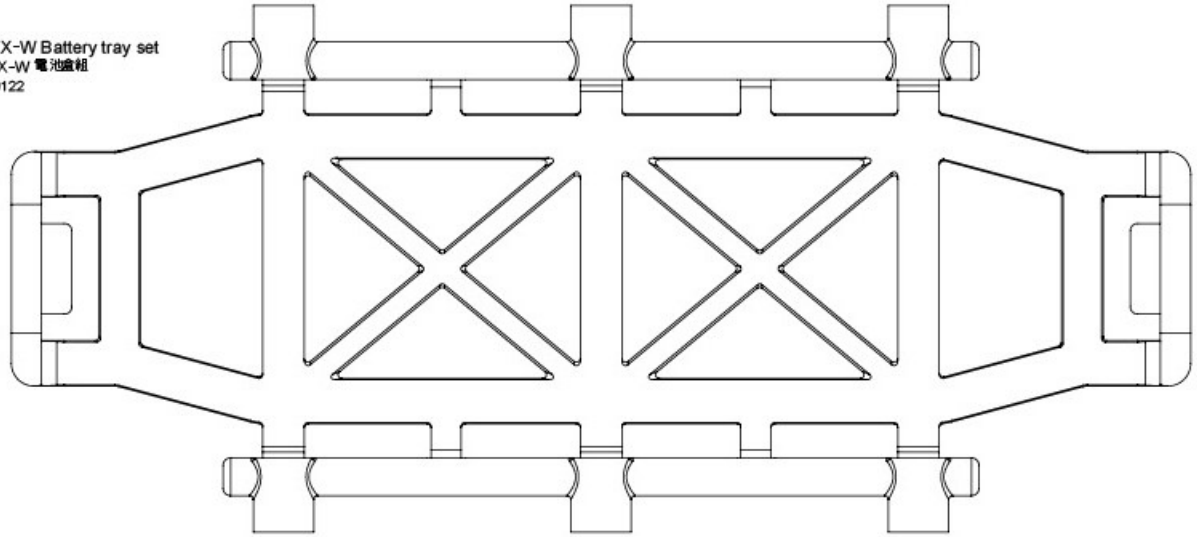



Velcro strap 16×210mm
電池束帶
130046

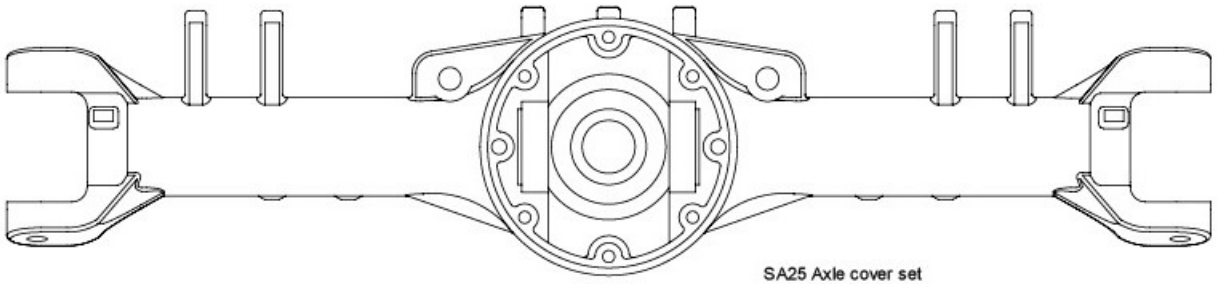

SA25 Axle cover set
SA25 車軸殼組
230137

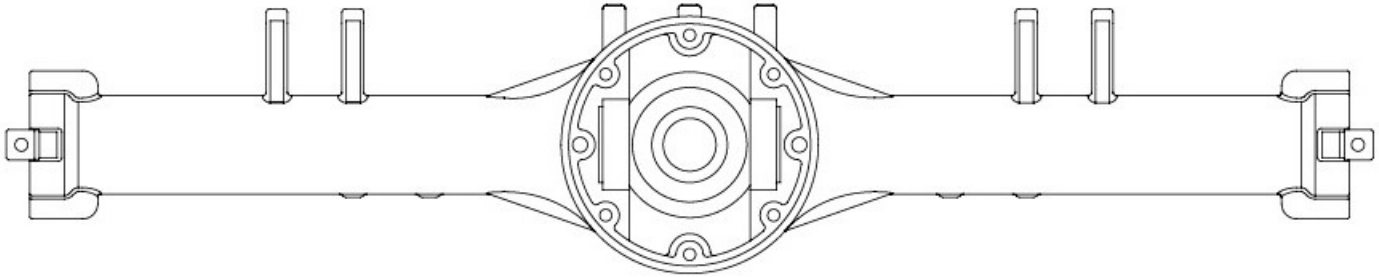

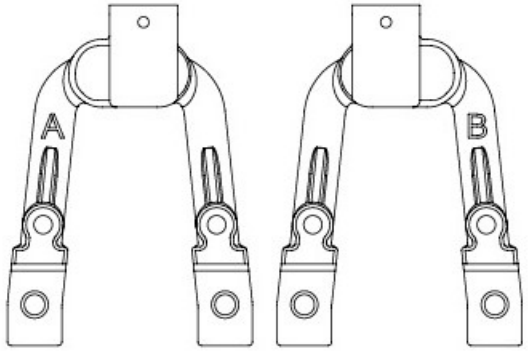

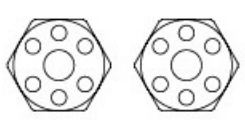

Damper stay set ×2
避震架組
230053

CFX Motor mount
CFX 馬達座
310088

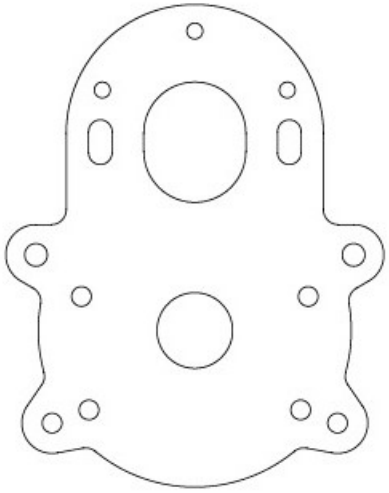



Alum. link 103mm ×1
鋁合金拉桿 103mm
810038S



Alum. link 88mm ×2
鋁合金拉桿 88mm
810035S



Alum. link 76mm ×2
鋁合金拉桿 76mm
810025S



Alum. link 72.5mm ×2
鋁合金拉桿 72.5mm
810034S



Alum. link 60.5mm ×2
鋁合金拉桿 60.5mm
810026S



Alum. link 48.5mm ×1
鋁合金拉桿 48.5mm
810039S

CMX Car body post set ×2
CMX 車殼支柱組
230026

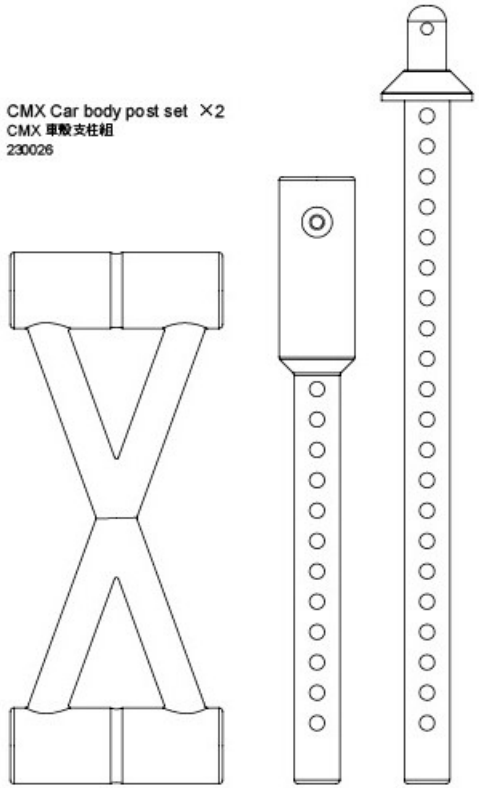

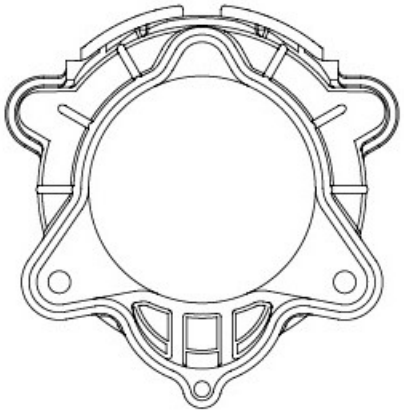



CFX Deceleration gear box set
CFX 減速箱組
230045

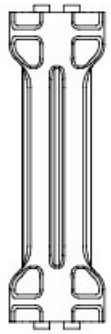

CFX Driveshaft set
CFX 驅動軸組
230048



Receiver case set
接收機盒組
230089

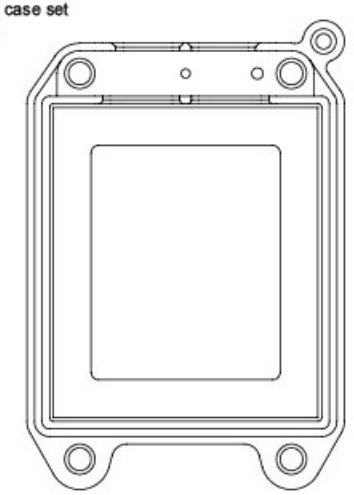

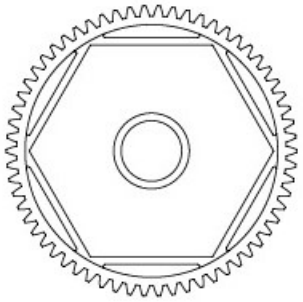

M06 Spur gear 62T
M06 大齒盤 62T
230044

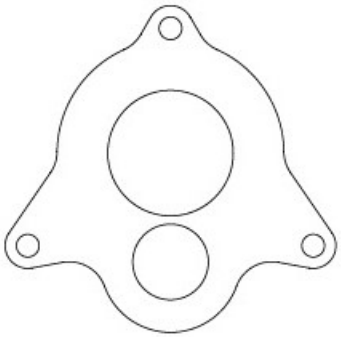

Bulkhead plate
減速箱補板
310089

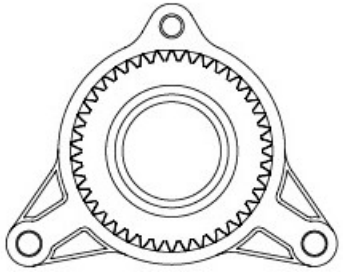

Gear 42T
齒輪 42T
310082

Receiver case seals
防水膠圈組
130051

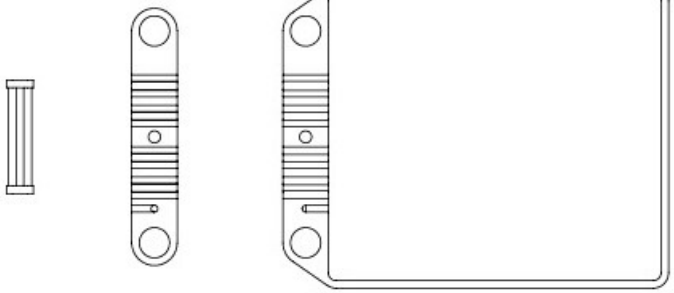

5.8 Rod ends set ×4
5.8 拉桿頭組
230057

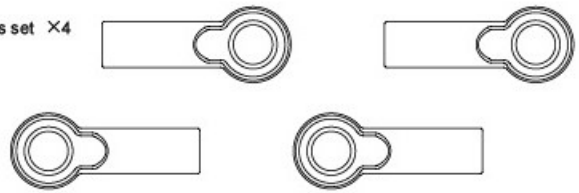

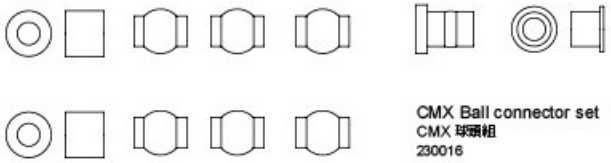

CMX Ball connector set ×5
CMX 球頭組
230016

Servo horn set (23T/25T)
伺服機舵片組 (23T/25T)
210032



CMX Knuckle set ×1
CMX 轉向座組
230025

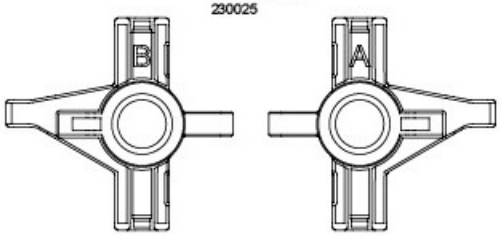

Slipper Pad ×2
扭限摩擦片
130045

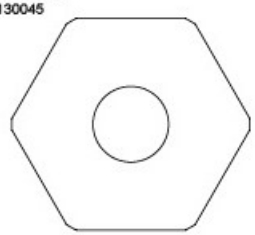

Slipper Plate ×2
扭限墊盤
310080

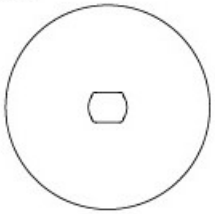

648 1.9" Crawler wheel ×4
648 1.9" 攀岩框
230043

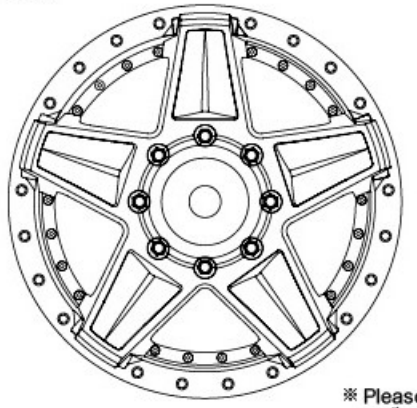

236 1.9" Crawler wheel ×4
236 1.9" 攀岩框
832071BK

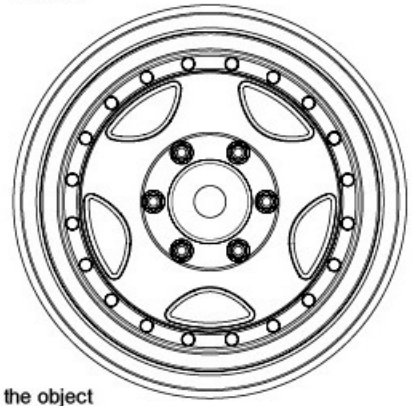

※ Please make the object as the standard.
請以實物為主。

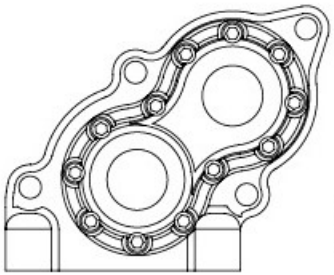

CFX Transfer case set
CFX 分動箱組
230047

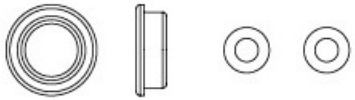

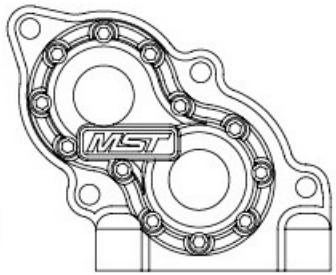

Rod ends set ×2
拉桿頭組
230055

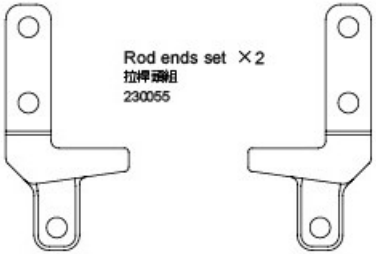

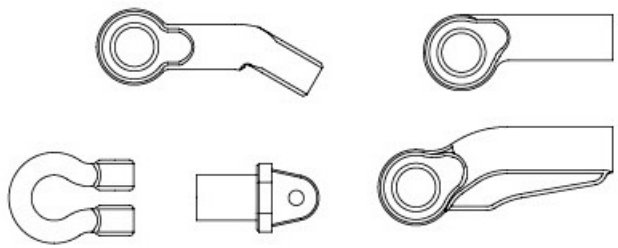

CFX Gear box support
CFX 減速箱支架組
230046



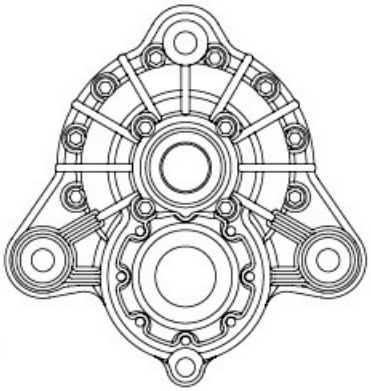

CFX-W Chassis rail ×2
CFX-W 大樑
310093





Inner sponge 30×105×50 ×4
內襯 30×105×50
130058

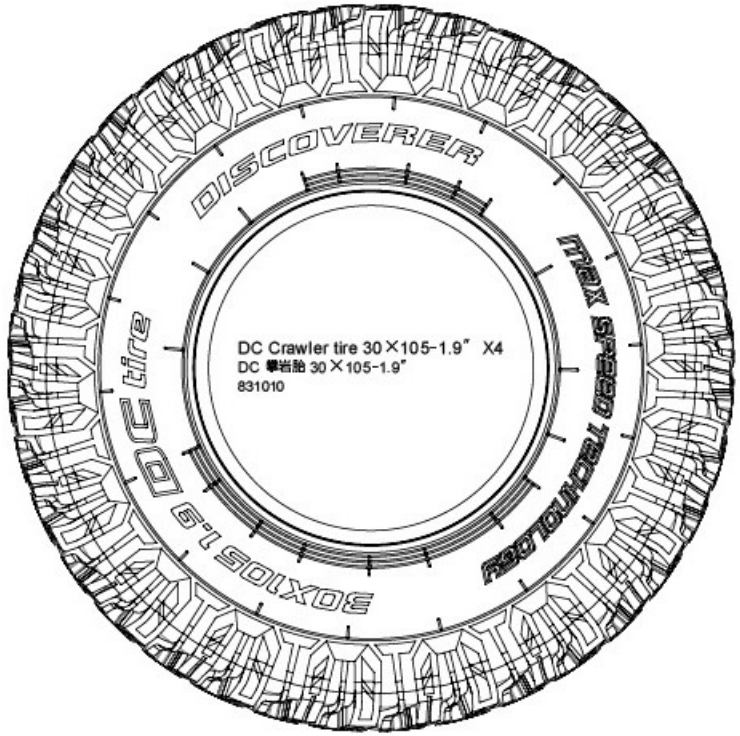

DC Crawler tire 30×105-1.9" X4
DC 攀岩胎 30×105-1.9"
831010

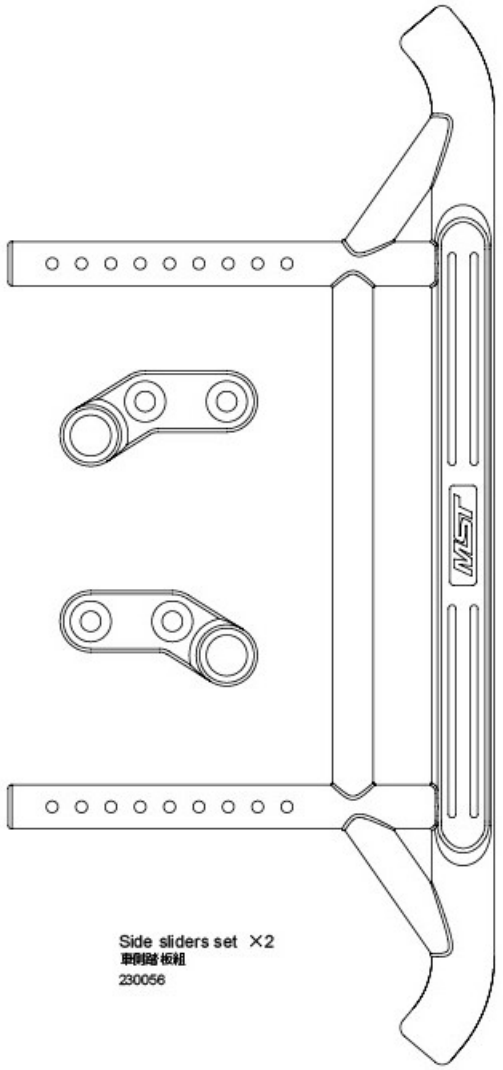

Side sliders set ×2
車側踏板組
230056

CMX Gear box chassis set
CMX 減速箱底盤組
230020

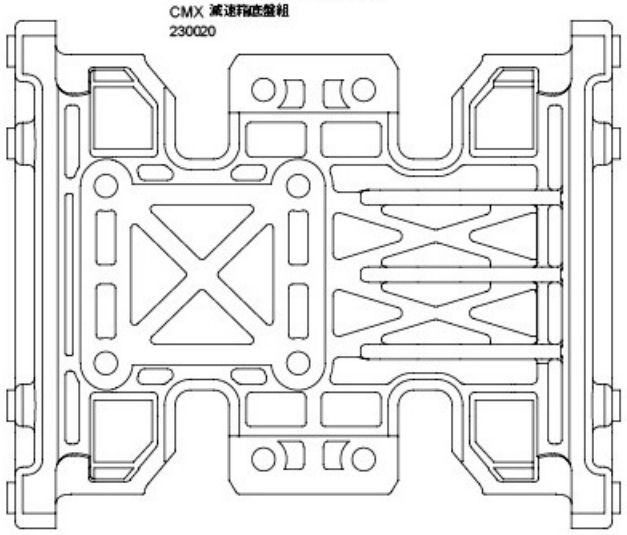

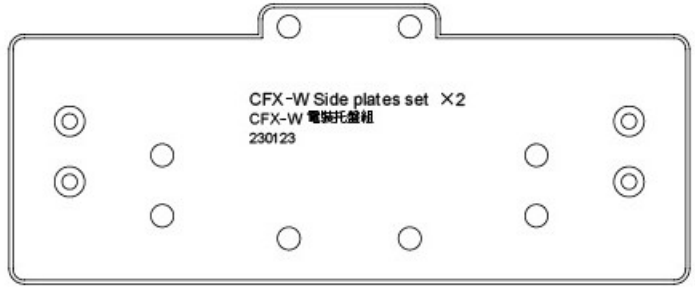

CFX-W Side plates set ×2
CFX-W 電裝托盤組
230123

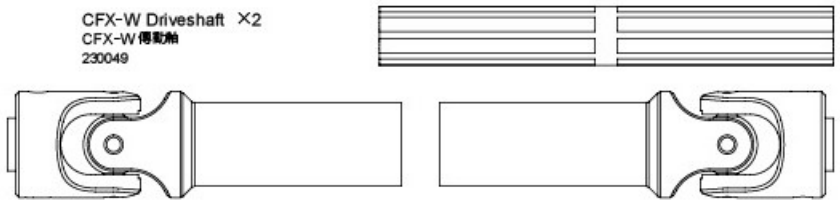

CFX-W Driveshaft ×2
CFX-W 傳動軸
230049

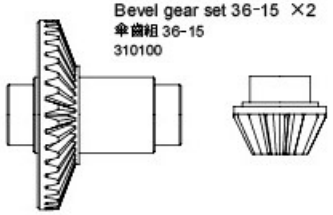

Bevel gear set 36-15 ×2
傘齒組 36-15
310100

PARTS CODE

110001	Round head screw M3×6 (10)	110086	Round head screw M3×16 (6)	210057	Damper cap set	230137	SA25 Axle cover set	810034S	Alum. link 72.5mm (silver) (2)
110002	Round head screw M3×8 (10)	110087	Round head screw M3×18 (6)	210529	Coil spring 45mm (hard)(silver)(4)	310072	Piston rod (4)	810035S	Alum. link 88mm (silver) (2)
110010	Round head screw M2.5×14 (6)	110088	Round head screw M3×20 (6)	230015	Damper parts (2)	310080	Slipper plate (2)	810038S	Alum. link 103mm (silver) (2)
110011	Cap screw M3×6 (6)	110089	Round head screw M3×30 (6)	230016	CMX Ball connector set	310081	Gear B 14T (4)	810039S	Alum. link 48.5mm (silver) (2)
110013	E-clip 2.0 (10)	110090	Shaft screw M4×4×12 (6)	230020	CMX Gear box chassis set	310082	Gear 42T	820020	Spacer 5×7×0.3 (8)
110016	R-clip 6.0 (10)	110091	Cap screw M3×40 (6)	230025	CMX Knuckle set	310083	Gear 32T	820078	Spacer 8×10×0.3 (8)
110017	Shaft 2×9.8 (10)	110092	King pin screw (4)	230026	CMX Car body post set	310084	Gear B 24T	831010	DC Crawler tire 30×105-1.9" (soft-30°) (2)
110018	Shaft 2×13.8 (5)	110096	Lock nut M4 (5)	230043	648 1.9" wheel (+5) (4)	310085	Gear A 24T		
110019	Shaft 2×11.8 (5)	110104	G-clip 11.0 (10)	230044	M06 Spur gear 62T	310086	Gear A 14T	832071BK	Black 236 wheel (+5) (4)
110021	Lock nut M3 (5)	110111	Round head screw M2×12 (6)	230045	CFX Deceleration gear box set	310087	Slipper shaft set		
110023	Set screw M3×16 (6)	120001	Ball bearing 10×15 (4)	230046	CFX Gear box support	310088	CFX Motor mount		
110026	Round head screw M3×10 (10)	120002	Ball bearing 5×10 (4)	230047	CFX Transfer case set	310089	Bulkhead plate		
110031	Shaft 2×10.8 (10)	120003	Ball bearing 5×8 (4)	230048	CFX Driveshaft set	310090	Gear shaft A		
110035	Set screw M3×3 (6)	120017	Bearing 5×8 (4)	230049	CFX-W Driveshaft	310091	Gear shaft B		
110037	E-clip 4.0 (10)	120018	Ball bearing 4×10×4 (2)	230053	Damper stay set	310092	Gear shaft C		
110044	Round head screw M2X6 (6)	120019	Ball bearing 8×12 (2)	230055	Rod ends set	310093	CFX-W Chassis rail		
110047	Spacer 3×6×0.5 (8)	130028	Damper O-ring P3 (blue) (10)	230056	Side sliders set	310099	Bevel gear shaft		
110048	Spacer 3×8×0.5 (8)	130032	Damper cap O-ring (10)	230057	5.8 Rod ends set	310100	Bevel gear set 36-15		
110049	Round head screw M3×5 (10)	130045	Slipper pad (2)	230089	Receiver case set	310108	Wheel axle (2)		
110061	Round head screw M3×14 (6)	130046	Velcro strap 16×210mm (2)	230122	CFX-W Battery tray set	310120	SA25 CVA axle (2)		
110081	Countersunk screw M3×14 (6)	130051	Receiver case seals	230123	CFX-W Side plates set	310121	SA25 Rear axle (2)		
110084	Round head screw M2×10 (6)	130058	Inner sponge 30×105×50 (2)	230136	Cross member & SA25 Differential	810025S	Alum. link 76mm (silver) (2)		
110085	Round head screw M2×16 (6)	210032	Servo horn set (23T/25T)		cover set	810026S	Alum. link 60.5mm (silver) (2)		

部品編號

110001	六角半圓頭螺絲 M3×6 (10)	110086	六角半圓頭螺絲 M3×16 (6)	210057	避震器上下蓋組	310072	避震軸心 (4)	810035S	鋁合金拉桿 88mm (銀) (2)
110002	六角半圓頭螺絲 M3×8 (10)	110087	六角半圓頭螺絲 M3×18 (6)	210529	避震彈簧 45mm (硬)(銀)(4)	310080	扭限墊盤	810038S	鋁合金拉桿 103mm (銀) (2)
110010	六角半圓頭螺絲 M2.5×14 (6)	110088	六角半圓頭螺絲 M3×20 (6)	230015	避震膠件組 (2)	310081	齒輪 B 14T (4)	810039S	鋁合金拉桿 48.5mm (銀) (2)
110011	六角有頭螺絲 M3×6 (半牙) (6)	110089	六角半圓頭螺絲 M3×30 (6)	230016	CMX 球頭組	310082	齒輪 42T	820020	墊片 5×7×0.3 (8)
110013	E扣 2.0 (10)	110090	銷釘螺絲 M4×4×12 (6)	230020	CMX 減速箱底盤組	310083	齒輪 32T	820078	墊片 8×10×0.3 (8)
110016	R銷 6.0 (10)	110091	六角有頭螺絲 M3×40 (半牙) (6)	230025	CMX 轉向座組	310084	齒輪 B 24T	831010	DC 攀岩胎 30×105-1.9" (軟-30°) (2)
110017	插銷 2×9.8 (10)	110092	大王螺絲 (4)	230026	CMX 車殼支柱組	310085	齒輪 A 24T	832071BK	黑色236輪框 (+5) (4)
110018	插銷 2×13.8 (5)	110096	防鬆螺帽 M4 (5)	230043	648 1.9" 輪框 (+5) (4)	310086	齒輪 A 14T		
110019	插銷 2×11.8 (5)	110104	G扣 11.0 (10)	230044	M06 大齒盤 62T	310087	扭限軸心組		
110021	防鬆螺帽 M3 (5)	110111	六角半圓頭螺絲 M2×12 (6)	230045	CFX 減速箱組	310088	CFX 馬達座		
110023	六角止付螺絲 M3×16 (6)	120001	培林 10×15 (4)	230046	CFX 減速箱支架組	310089	減速箱艙板		
110026	六角半圓頭螺絲 M3×10 (10)	120002	培林 5×10 (4)	230047	CFX 分動箱組	310090	齒輪軸心 A		
110031	插銷 2×10.8 (10)	120003	培林 5×8 (4)	230048	CFX 驅動軸組	310091	齒輪軸心 B		
110035	六角止付螺絲 M3×3 (6)	120017	軸承 5×8 (4)	230049	CFX-W 傳動軸	310092	齒輪軸心 C		
110037	E扣 4.0 (10)	120018	培林 4×10×4 (2)	230053	避震架組	310093	CFX-W 大樑 (2)		
110044	六角半圓頭螺絲 M2X6 (6)	120019	培林 8×12 (2)	230055	拉桿頭組	310099	傘齒軸		
110047	墊片 3×6×0.5 (8)	130028	阻尼器O環 P3 (藍) (10)	230056	車側踏板組	310100	傘齒組 36-15		
110048	墊片 3×8×0.5 (8)	130032	避震上蓋O環 (10)	230057	5.8 拉桿頭組	310108	萬向接杯 (2)		
110049	六角半圓頭螺絲 M3×5 (10)	130045	扭限摩擦片 (2)	230089	接收機盒組	310120	SA25 CVA 輪軸 (2)		
110061	六角半圓頭螺絲 M3×14 (6)	130046	電池束帶 16×210mm (2)	230122	CFX-W 電池盒組	310121	SA25 後輪軸 (2)		
110081	六角沉頭螺絲 M3×14 (6)	130051	防水膠圈組	230123	CFX-W 電裝托盤組	810025S	鋁合金拉桿 76mm (銀) (2)		
110084	六角半圓頭螺絲 M2×10 (6)	130058	內襯 30×105×50 (2)	230136	橫樑 & 車軸蓋組	810026S	鋁合金拉桿 60.5mm (銀) (2)		
110085	六角半圓頭螺絲 M2×16 (6)	210032	伺服機舵片組 (23T/25T)	230137	SA25 車軸殼組	810034S	鋁合金拉桿 72.5mm (銀) (2)		

MST

max speed technology

CFX-WS OFF ROAD

RC 4WD HIGH PERFORMANCE OFF ROAD CAR

READY-TO-RUN RTR

EXPLODED MANUAL

WWW.RC-MST.COM

[facebook.com/MST.tw]

Max Speed Technology

PRINTED WITH SOY INK

026239