MST

max speed TECHNOLOGY

ASSEMBLY KIT

XXX-R Classic

1/10 SCALE RC 4WD HIGH PERFORMANCE RACING CAR

INSTRUCTION MANUAL

ON ROAD USE ONLY
FULL BALL BEARINGS

WHEELBASE :	STANDARD 257mm (adjustable)
WIDTH :	STANDARD 190mm (adjustable)
GEAR RATIO :	2.12 (36T/17T)
CASTER :	6 degrees

www.rc-mst.com

※SPECIFICATION ARE SUBJECT TO CHANGE WITHOUT NOTICE

XXX-R Classic

1/10 SCALE RC 4WD HIGH PERFORMANCE RACING CAR

EXPLODED VIEW

MST max SPEED TECHNOLOGY

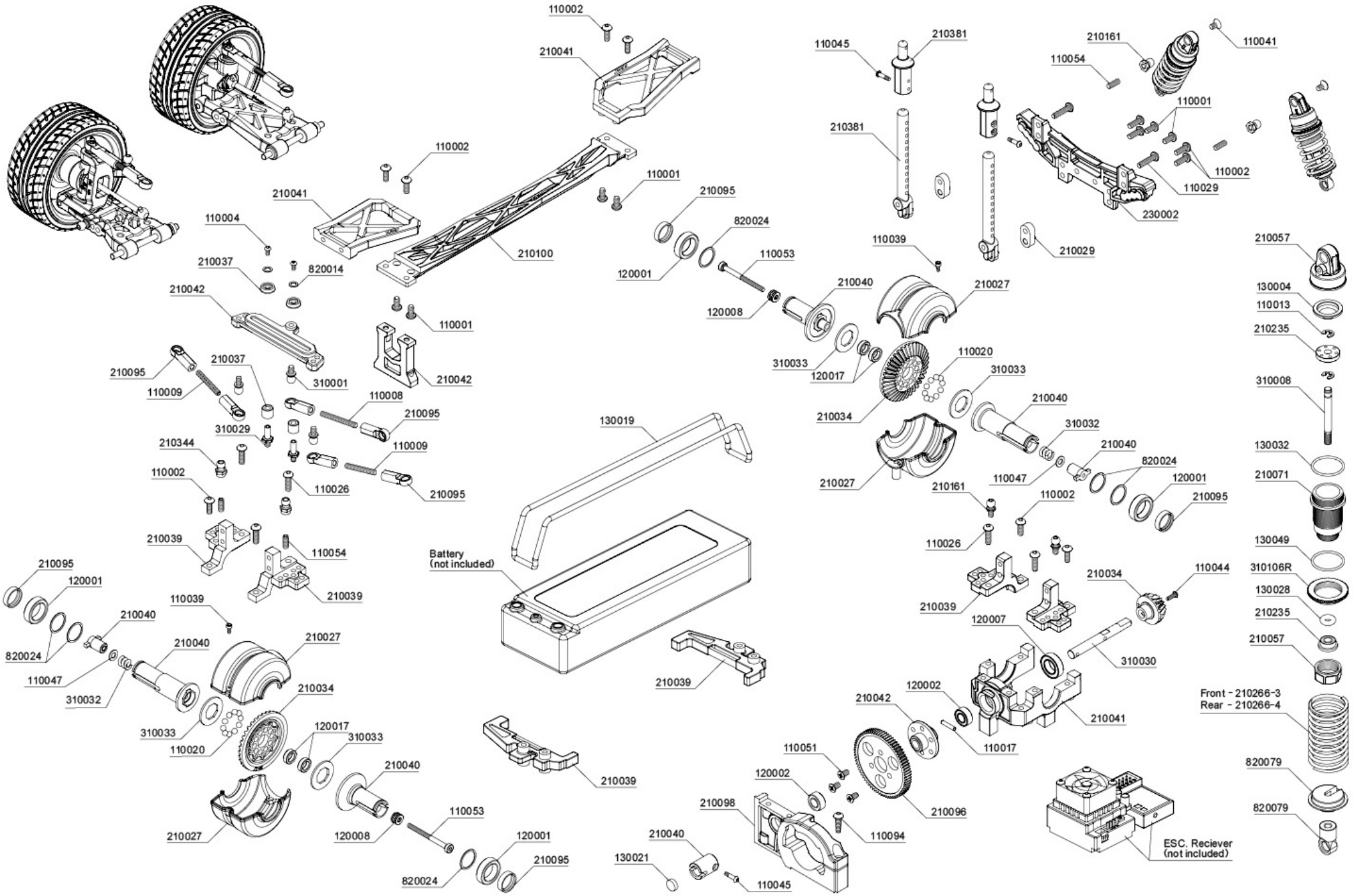

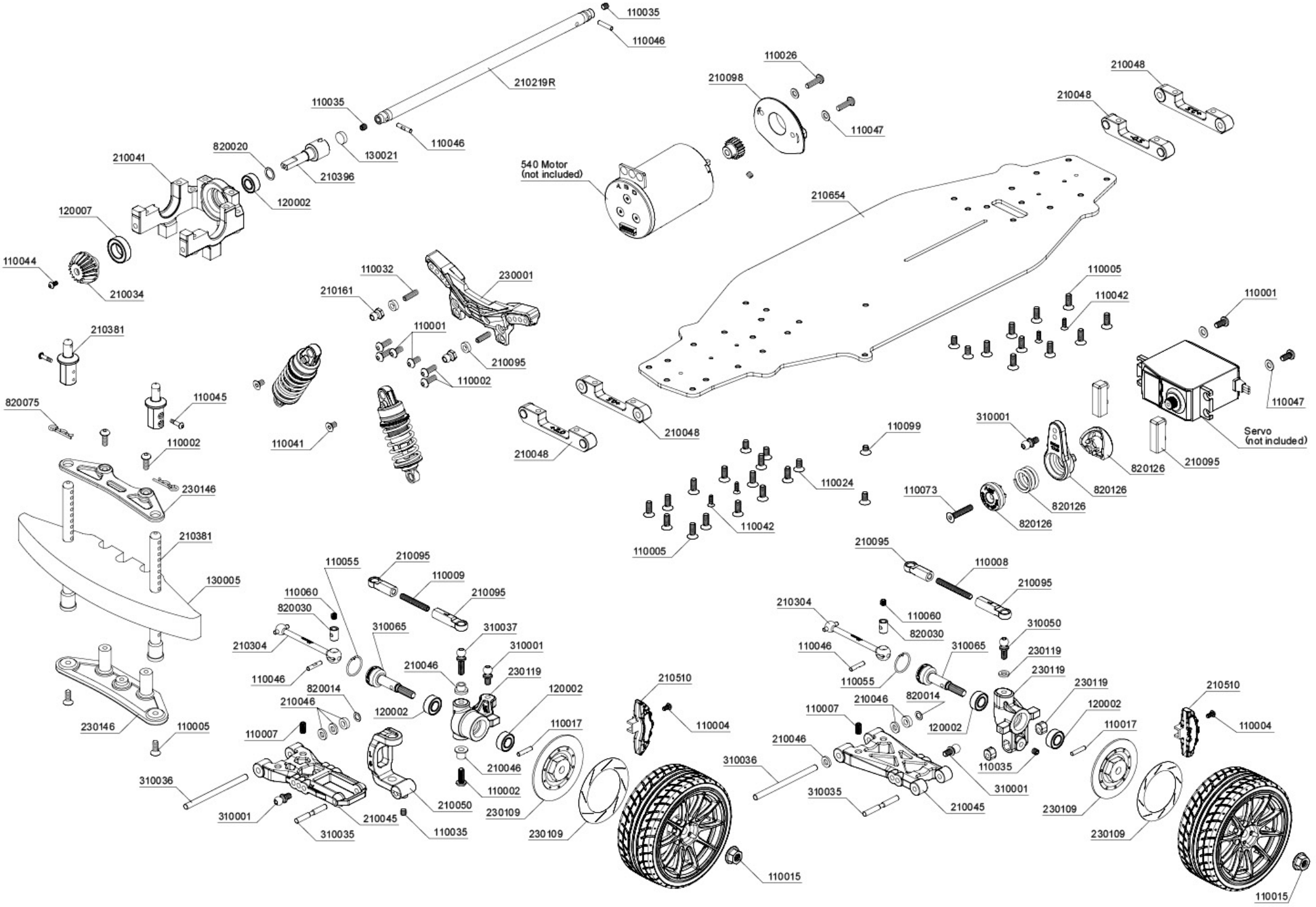
110035
110046
210219R
110035
110046
130021
820020
210396
210041
120002
120007
110044
210034
110026
210098
110047
210048
210048
540 Motor
(not included)
210654
110032
230001
210161
110001
210095
110002
210381
110045
820075
110002
110041
210048
210048
110005
110042
110001
110047
Servo
(not included)
310001
110099
820126
210095
820126
820126
820126
110024
110073
110042
110005
230146
210381
130005
110055
210095
110009
210095
110060
820030
210304
310065
310037
310001
210046
230119
110046
820014
210046
120002
120002
110007
110005
230146
110017
210046
110002
210050
310036
310001
210045
110035
310035
230109
230109
210510
110004
110015
210095
110008
210095
210304
110060
820030
310050
110046
310065
230119
110055
230119
210046
820014
110007
120002
120002
110017
210510
110004
210046
310036
110035
310001
310035
210045
230109
230109
110015

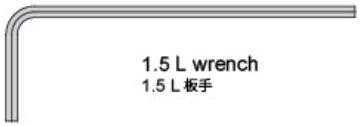

1.5 L wrench
1.5 L 板手



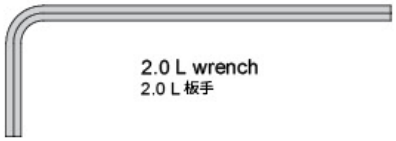

2.0 L wrench
2.0 L 板手



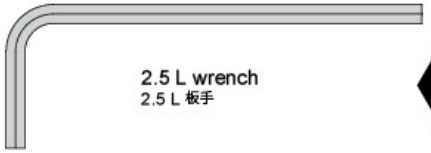

2.5 L wrench
2.5 L 板手





5.5×4.0 Wrench
5.5×4.0 板手

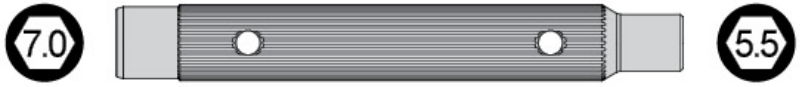

5.5 & 7.0 alum. wrench
5.5 & 7.0 套筒板手

NECESSARY TOOLS FOR ASSEMBLY 工具需求
〔NOT INCLUDED IN KIT〕〔另購〕





Hobby knife
美工刀

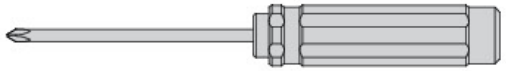



Screwdriver
螺絲起子

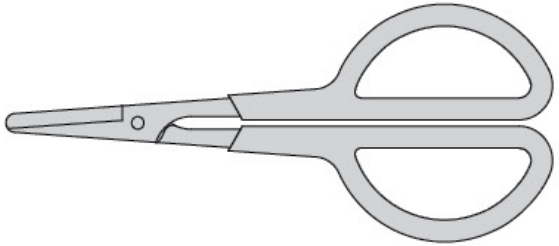



Scissors
剪刀

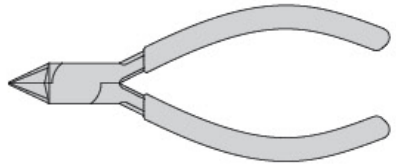



Side cutter
斜口鉗

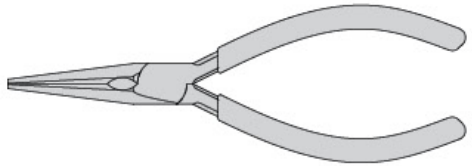



Needle nose pliers
尖嘴鉗





210272
Turnbucle wrench
拉桿板手

Please follow the assembling figures and instructions closely for your [XXX-R Classic] best performance!
請依照說明書圖示步驟安裝以發揮【XXX-R Classic】最好效能！

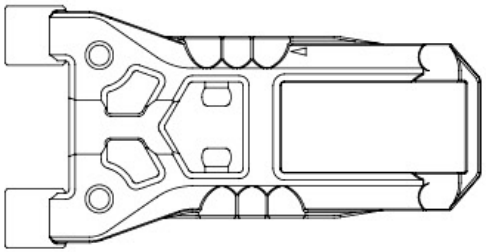

Front lower arm ×2
前下擺臂

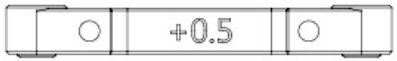

Lower arm mount +0.5 ×1
下擺臂座 +0.5

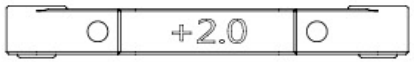

Lower arm mount +2.0 ×1
下擺臂座 +2.0



3×46 Arm shaft ×2
擺臂插銷



4.8×4.5 Copper ball connector ×2
銅製球頭螺絲



M3×8 screw ×4
沉頭螺絲



M3×6 screw ×2
止付螺絲



3×6×1 Spacer ×4
墊片



3×6×2 Spacer ×2
墊片



3×5×0.3 Spacer ×2
墊片

STEP 1 Front lower arm assembly
前下擺臂組裝

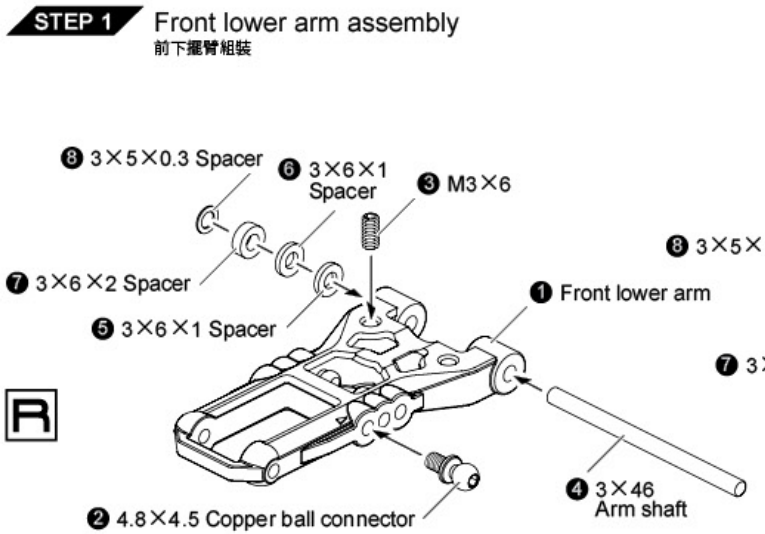

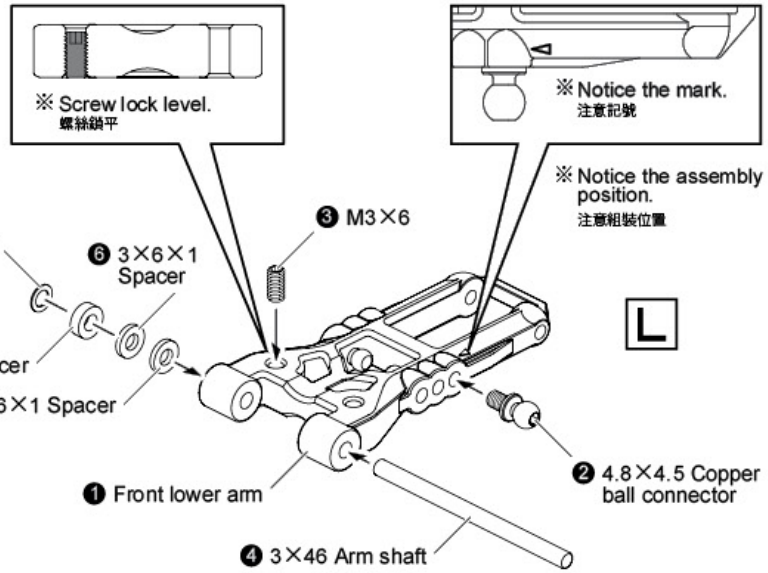

STEP 2 Attaching front lower arm
安裝前下擺臂

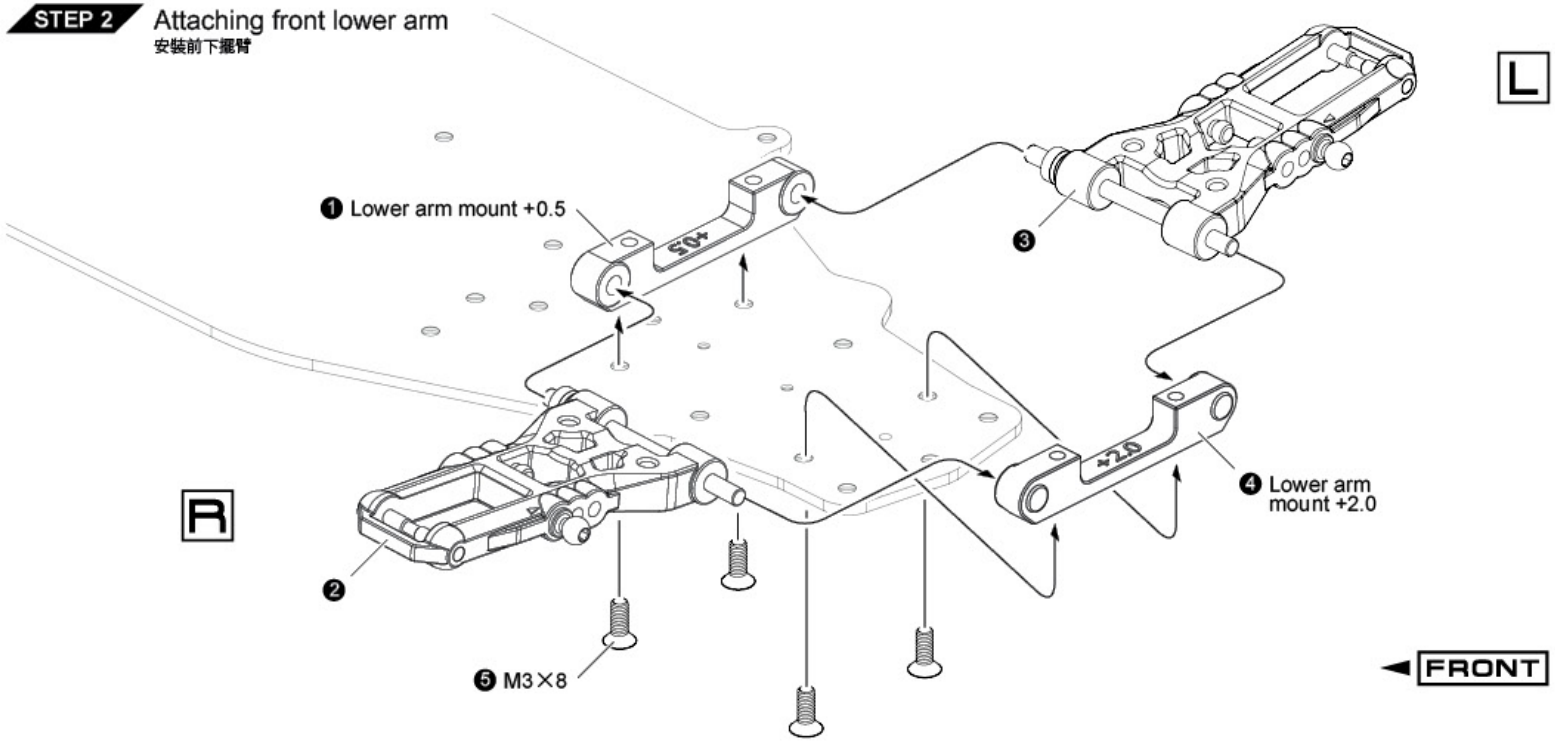

REAR LOWER ARM
後下擺臂

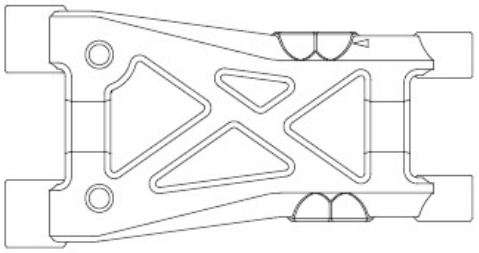

Rear lower arm ×2
後下擺臂



Lower arm mount -0.5 ×1
下擺臂座 -0.5



Lower arm mount +2.5 ×1
下擺臂座 +2.5



3×46 Arm shaft ×2
擺臂插銷



4.8×4.5 Copper ball connector ×2
銅製球頭螺絲



M3×8 screw ×4
沉頭螺絲



M3×6 screw ×2
止付螺絲



3×6×1 Spacer ×4
墊片



3×6×2 Spacer ×2
墊片



3×5×0.3 Spacer ×2
墊片

STEP 1 Rear lower arm assembly
後下擺臂組裝

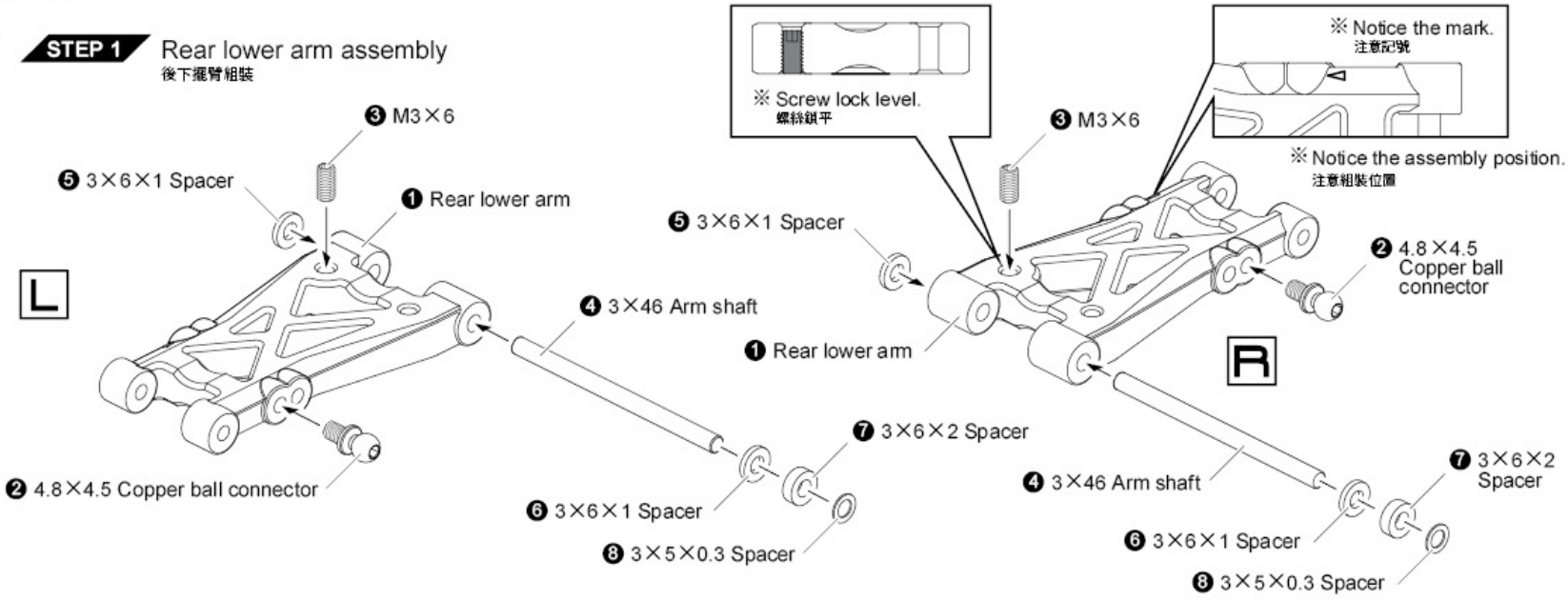

STEP 2 Attaching rear lower arm
安裝後下擺臂

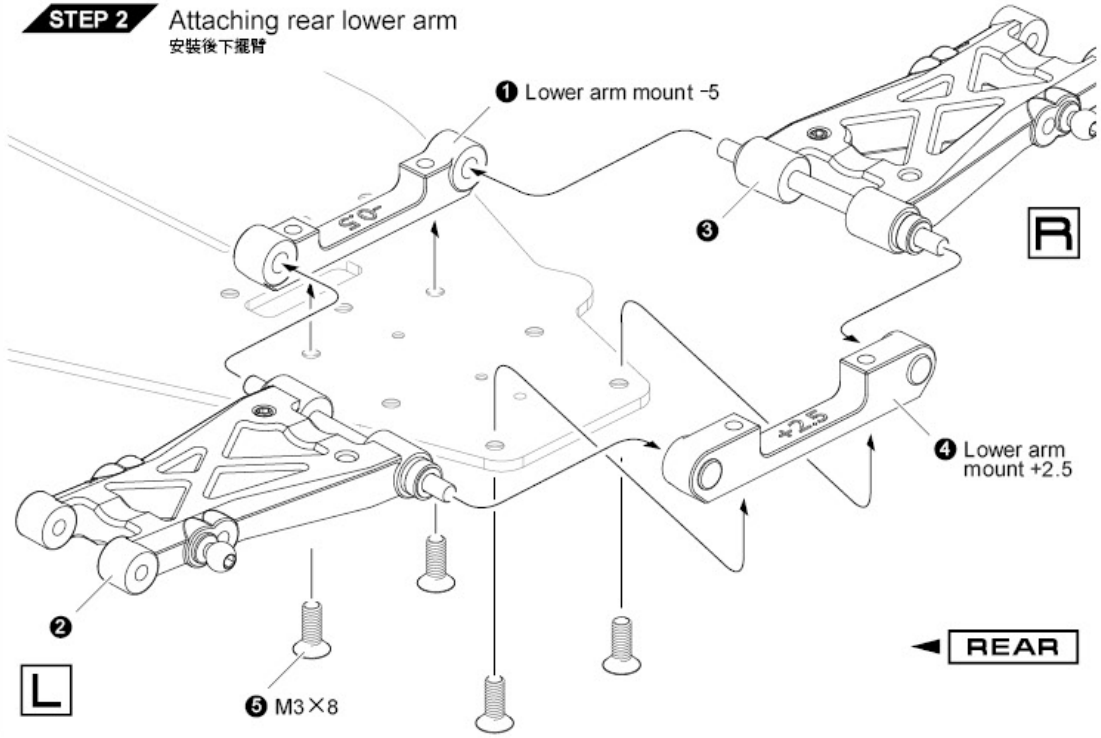

REAR TOE ANGLE SETTING

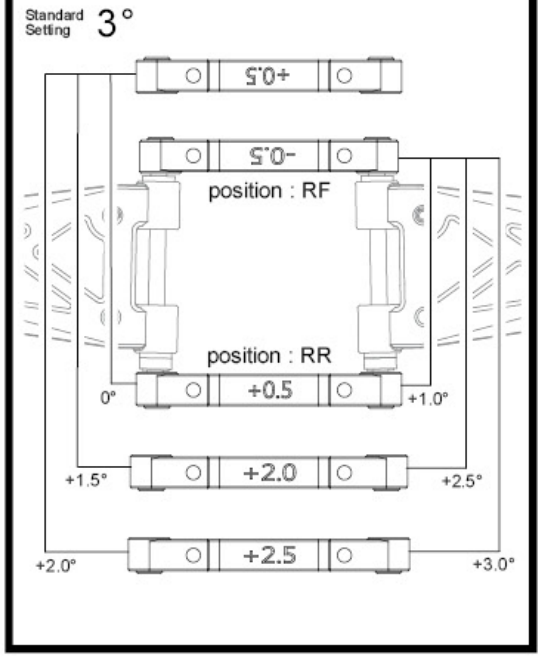

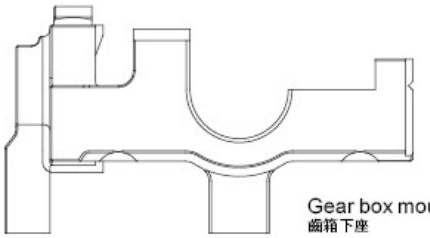

Gear box mount ×1
齒箱下座

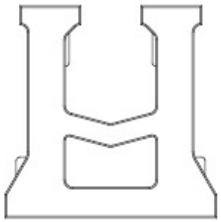

Upper deck support ×1
二樓板連結座

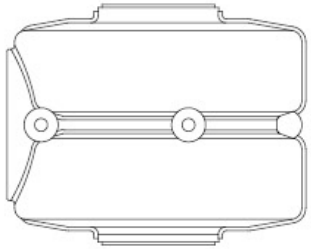

Bevel diff. lower dust cover ×1
傘差下防塵殼

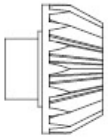

Bevel gear 17T ×1
傘齒

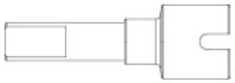

Alum. integrated shaft joint ×1
鋁合金短軸接杯



8×14 Ball bearing ×1
培林



M2×6 screw ×2
沉頭螺絲



5×10 Ball bearing ×1
培林



M3×8 screw ×5
沉頭螺絲



6.5×2 Sponge ×1
泡棉



M2×4 screw ×1
圓頭螺絲



5×7×0.3 Spacer ×1
墊片

STEP 1 Front gear box assembly
前齒箱組裝

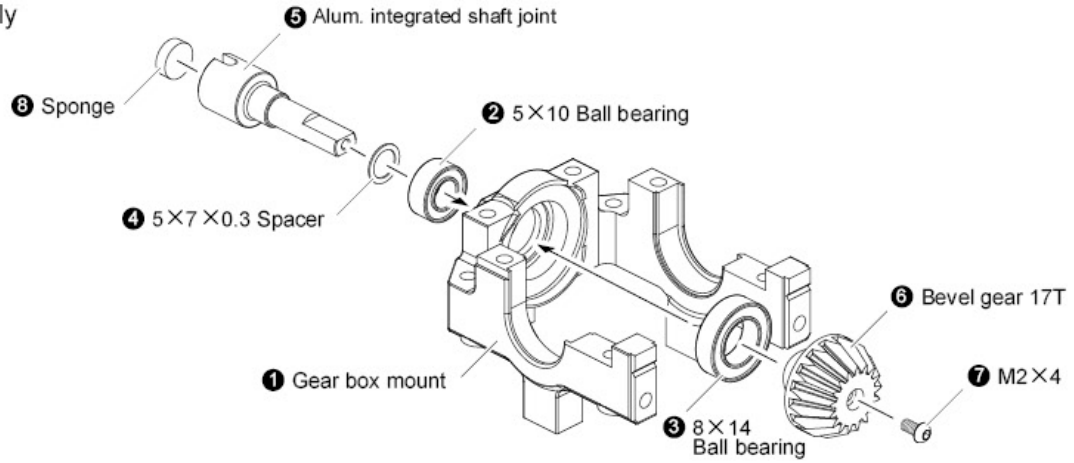

STEP 2 Attaching front gear box
安裝前齒箱

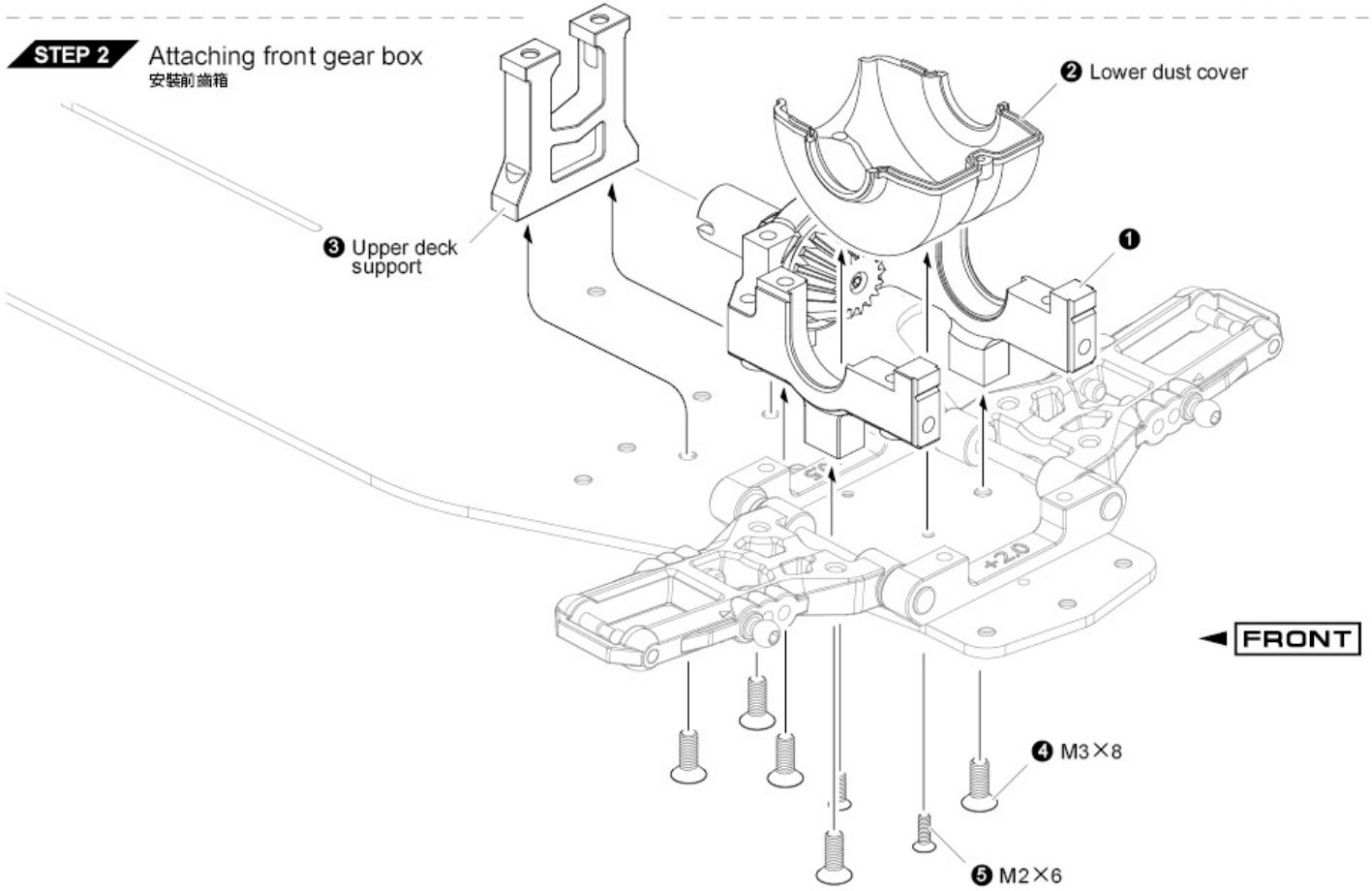

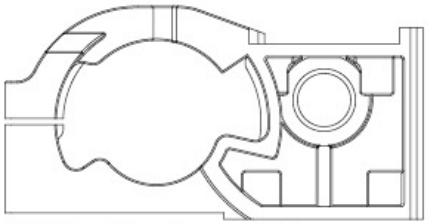

XXX Eccentric motor mount ×1
XXX 偏心式馬達座

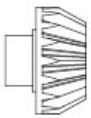

Bevel gear 17T ×1
傘齒



Bevel gear-long shaft ×1
傘齒長軸

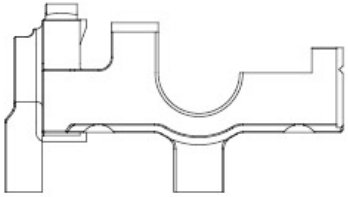

Gear box mount ×1
齒箱下座



2×9.8 Pin ×1
插銷



M2×4 screw ×1
圓頭螺絲



M3×5 screw ×3
扁頭螺絲

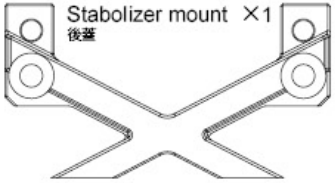

Stabolizer mount ×1
後蓋



M2×6 screw ×2
沉頭螺絲



3×7 Screw ×2
自攻沉頭螺絲



M3×8 screw ×3
沉頭螺絲



M3×6 screw ×2
圓頭螺絲



Spur gear 48P 74T ×1
大直齒



5×10 Ball bearing ×2
培林



8×14 Ball bearing ×1
培林

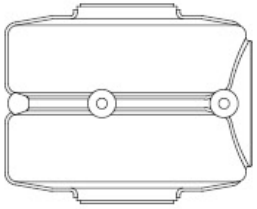

Bevel diff. lower dust cover ×1
傘差下防塵殼

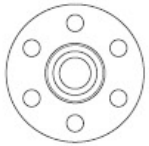

Spur gear holder ×1
大齒盤座

STEP 1 Rear gear box assembly
後齒箱組裝

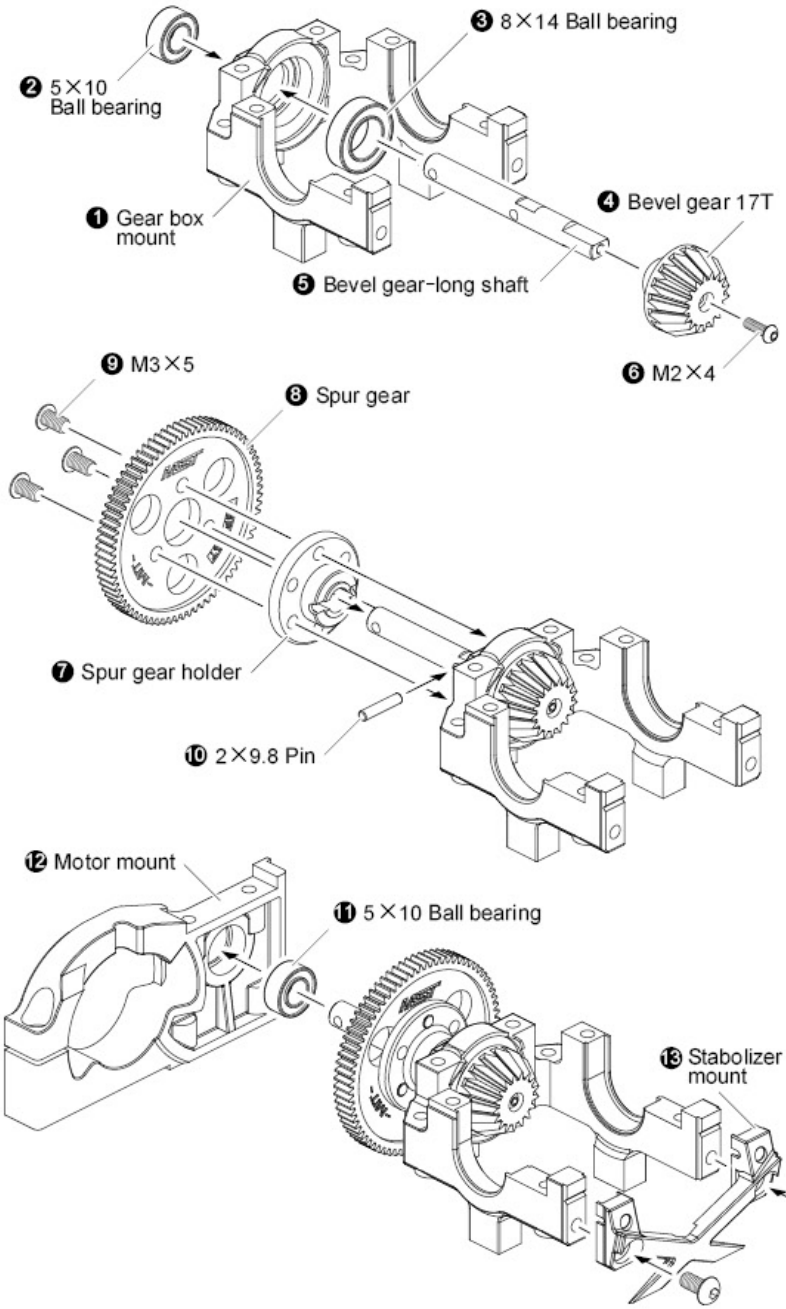

STEP 2 Attaching rear gear box
安裝後齒箱

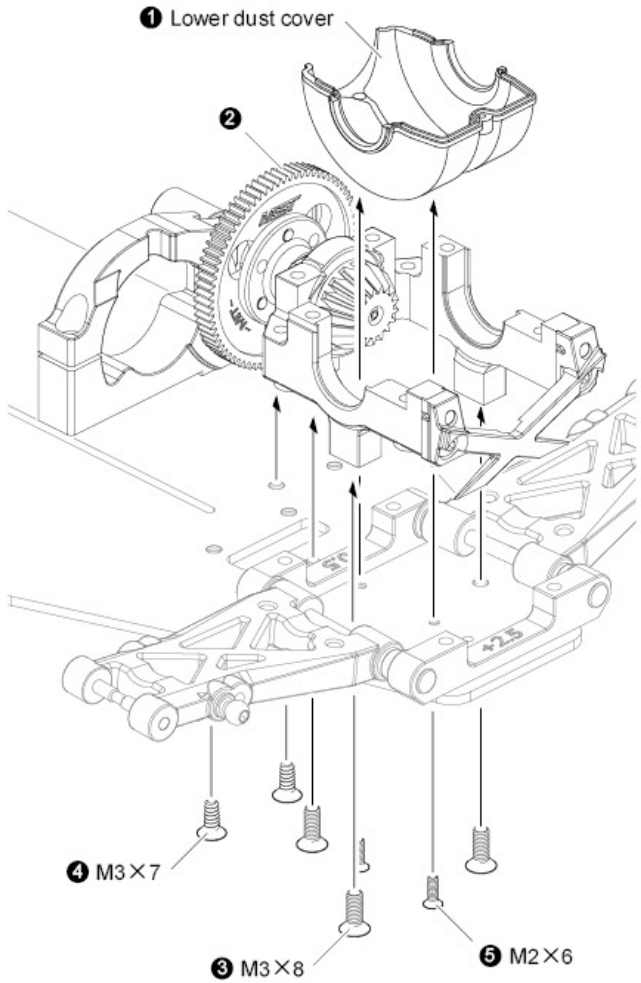

◄ REAR

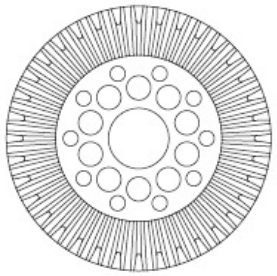

Bevel gear 36T ×2
傘齒



Joint ring ×4
接杆環

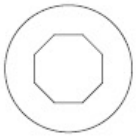

Diff. plate ×4
滾差壓板

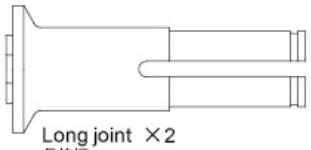

Long joint ×2
長接杆



Diff. nut ×2
滾差螺帽座

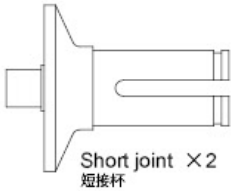

Short joint ×2
短接杆

Steel ball 1.5 ×16
鋼珠1.5



Steel ball 3.0 ×20
鋼珠3.0



Diff. spring ×2
滾差彈簧



M2.5×30 screw ×2
有頭螺絲(半牙)



2.5×6 Spacer ×4
鋼板



3×6×0.5 Spacer ×2
墊片



10×12×0.3 Spacer ×6
墊片



5×8×2.5 Bearing ×4
軸承



10×15 Ball bearing ×4
軸承

STEP 1 Diff. set assembly
滾差組裝

X2 Make 2

Apply ball diff. grease to the balls during assembly.
請於滾珠上塗油



Compress once, then attach.
請用鉗子壓縮彈簧後安裝

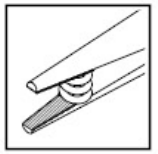



Tighten M2.5×30 Hex. screw to avoid diff. set loosing.
鎖緊 M2.5 ×30 六角螺絲，防止滾差鬆脫。

Attention! Don't over tighten screw, otherwise it will influence the diff. actuation.
請注意若鎖的過緊，會影響滾差作動。

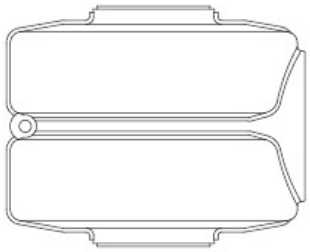

Bevel diff. upper dust cover ×2
傘差上防塵殼

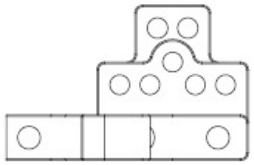

Gear box cover A ×2
齒箱上蓋 A

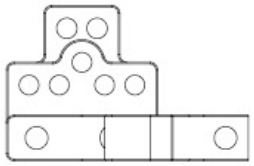

Gear box cover B ×2
齒箱上蓋 B



M1.6×4 screw ×2
有頭螺絲



M3×8 screw ×4
圓頭螺絲



M3×10 screw ×4
圓頭螺絲



M3×8 screw ×2
止付螺絲



Ball connector nut L 4.8 ×2
外六角球頭（長）



4.8×4.5 Copper ball connector ×2
銅製球頭螺絲

STEP 1 Gear box cover assembly
齒箱蓋組裝

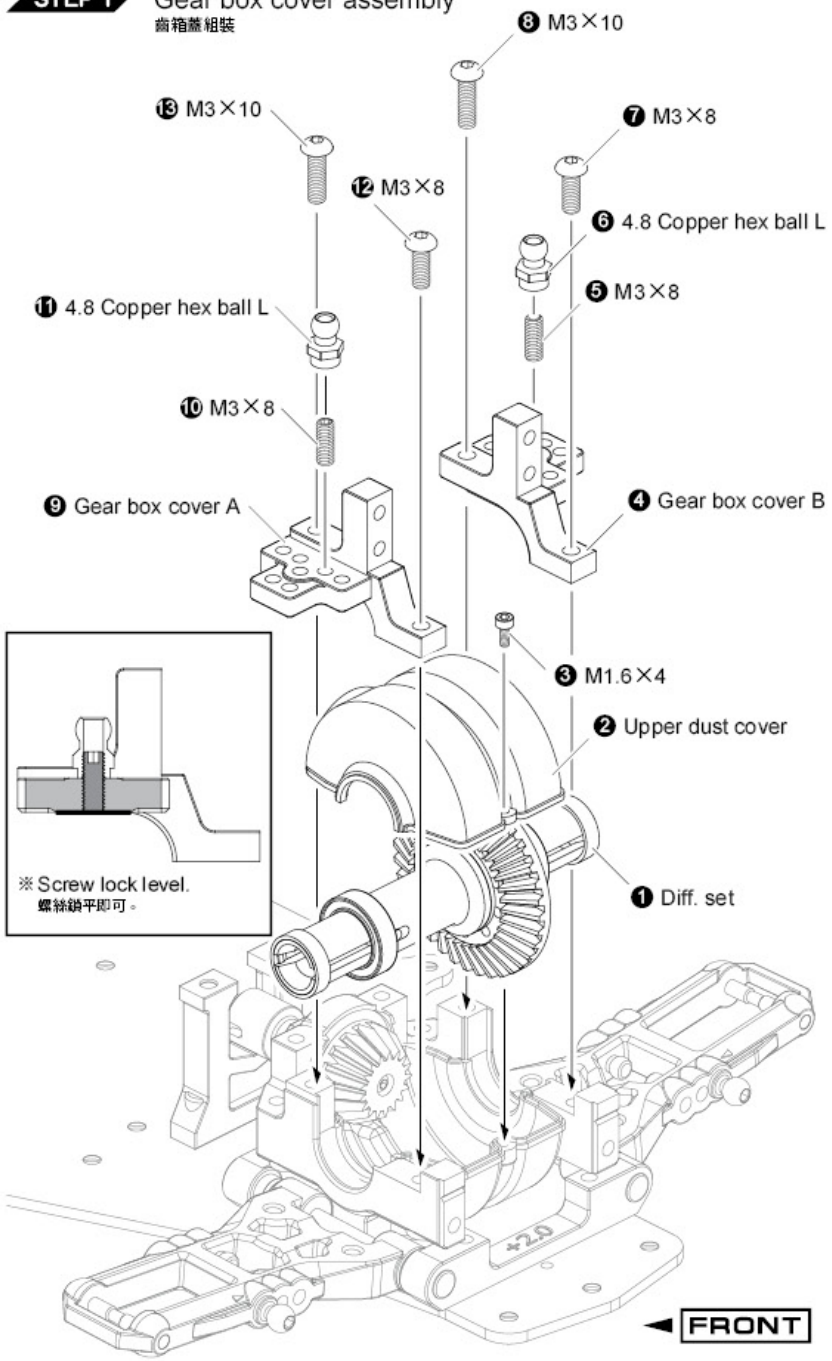

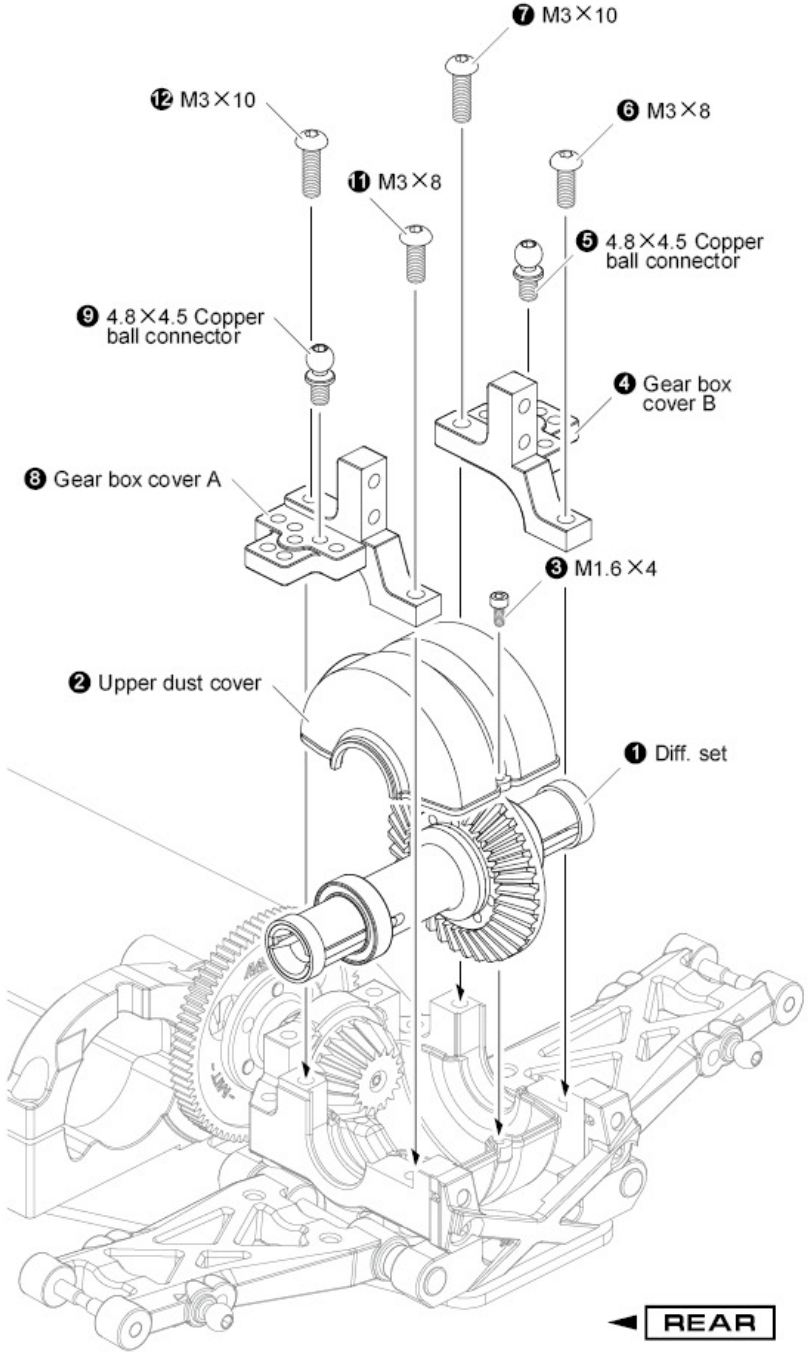

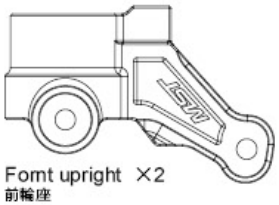
Fornt upright ×2
前輪座

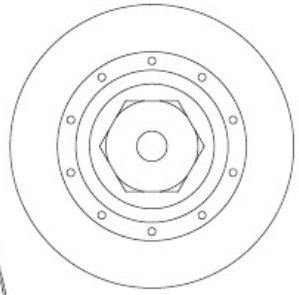
Wheel hubs
(large)(brake disc shaped) ×2
六角輪座(大)(剎車碟型)



6 Deg. C hubs set ×1
6度C座組


5×10 Ball bearing ×4
培林


Wheel axle ×2
萬向接杆


Brake calipers ×2
剎車卡鉗


King pin thbe A ×2
大王銷墊片 A


G-clip 10.0 ×2
G形扣 10.0


King pin thbe B ×2
大王銷墊片 B


Cross joint ×2
連結軸



Steel CVD universal shaft ×2
鋼製CVD傳動軸


M3×2.6 screw ×2
止付螺絲


2×9.8 Shaft ×2
插銷(削溝)


M3×8 screw ×2
圓頭螺絲


2×9.8 Shaft ×2
插銷


4.8×4.5 Copper ball connector ×2
銅製球頭螺絲

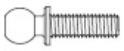
4.8×9 Ball connector ×2
內六角公球頭


M2X4 screw ×2
圓頭螺絲

STEP 1 Front axle assembly
前輪座組裝

R

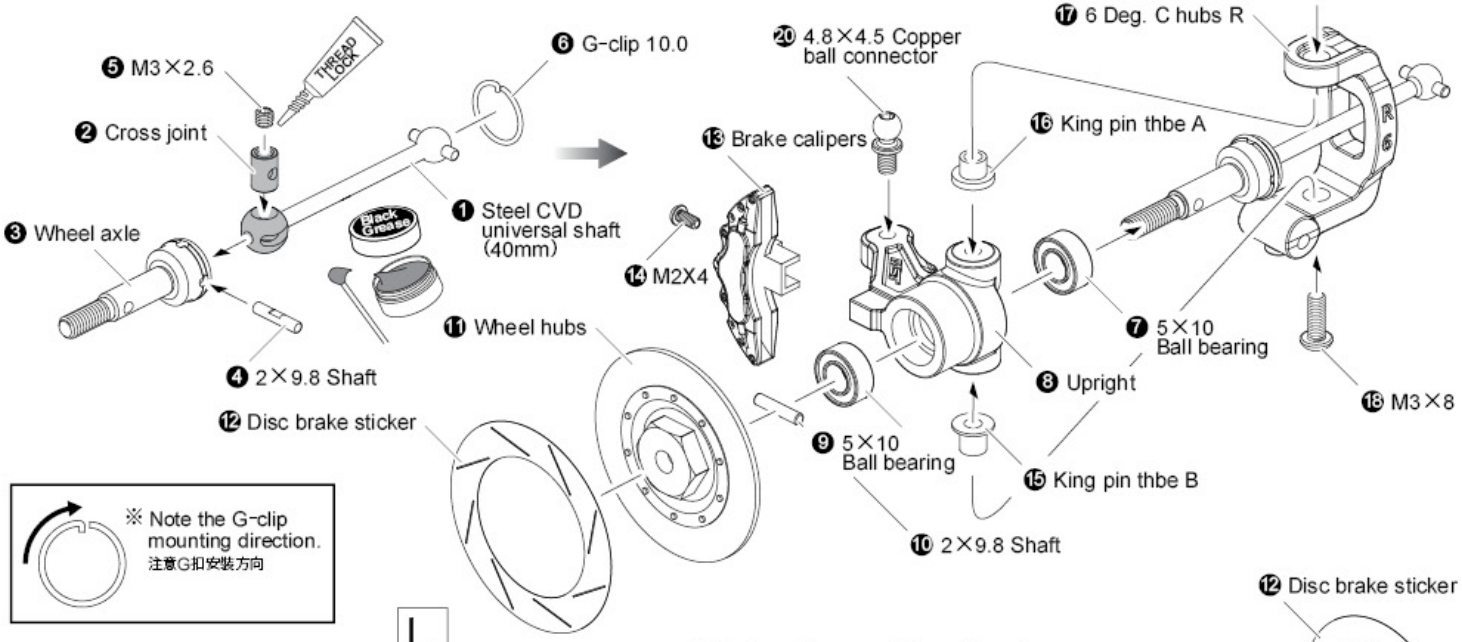

※ Note the G-clip mounting direction.
注意G扣安裝方向

L

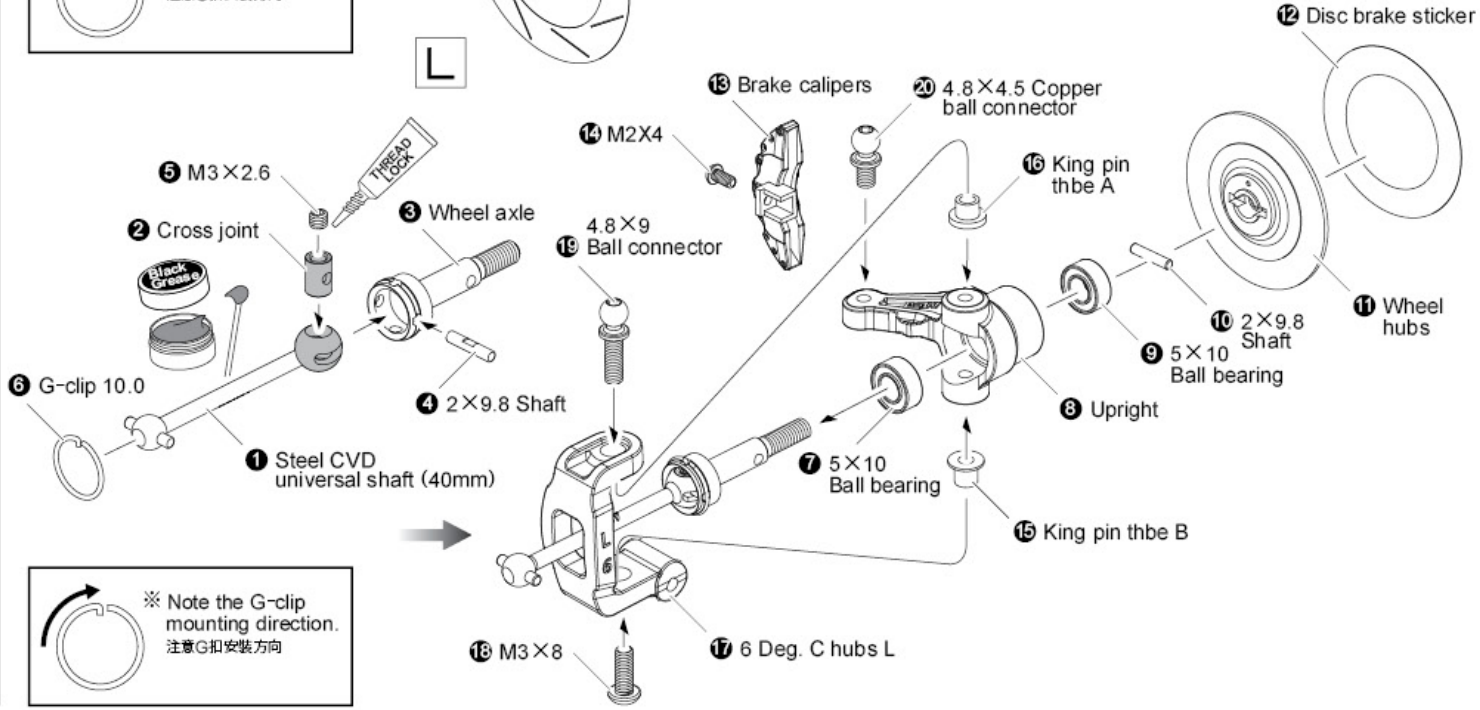

※ Note the G-clip mounting direction.
注意G扣安裝方向

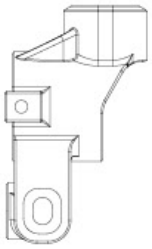

Rear upright ×2
後輪座

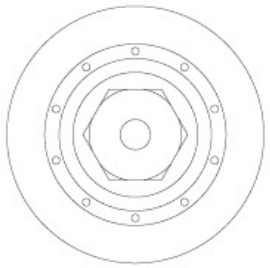

Wheel hubs
(small)(brake disc shaped) ×2
六角輪座(小)(剎車碟型)

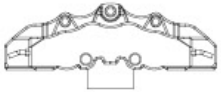

Brake calipers ×2
剎車卡鉗

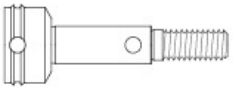

Wheel axle ×2
萬向接杆



M3×2.6 screw ×2
止付螺絲



Upright Bush ×4
後輪座襯套



M2×4 screw ×2
圓頭螺絲

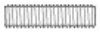

M3×12 screw ×2
止付螺絲



Cross joint ×2
連結軸



2×9.8 Shaft ×2
插銷(剖溝)



2×9.8 Shaft ×2
插銷



4.8 Copper hex ball ×2
外六角球頭



5×10 Ball bearing ×4
培林



G-clip 10.0 ×2
G形扣 10.0



Steel CVD universal shaft ×2
鋼製CVD傳動軸

STEP 1 Rear axle assembly
後輪座組裝

L

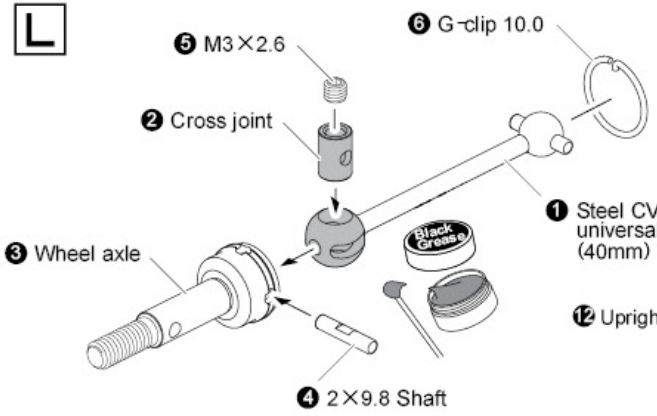



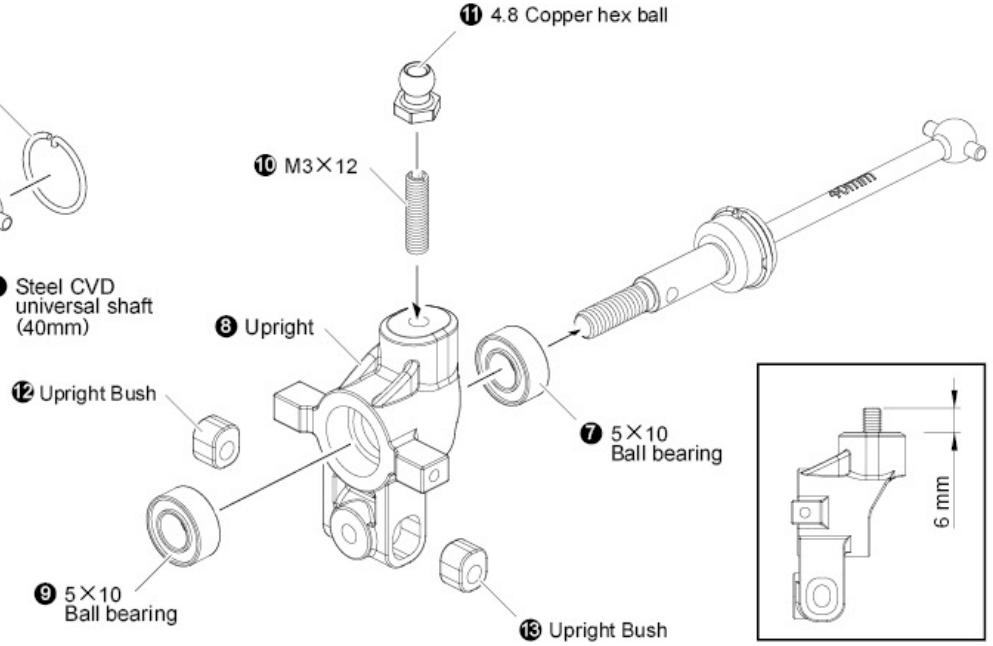

R

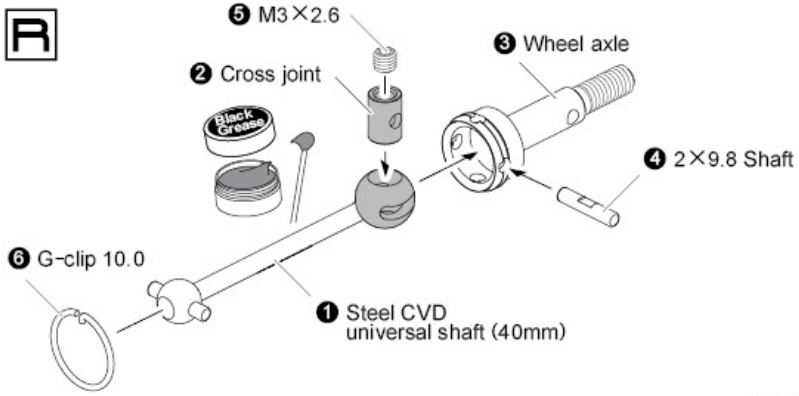



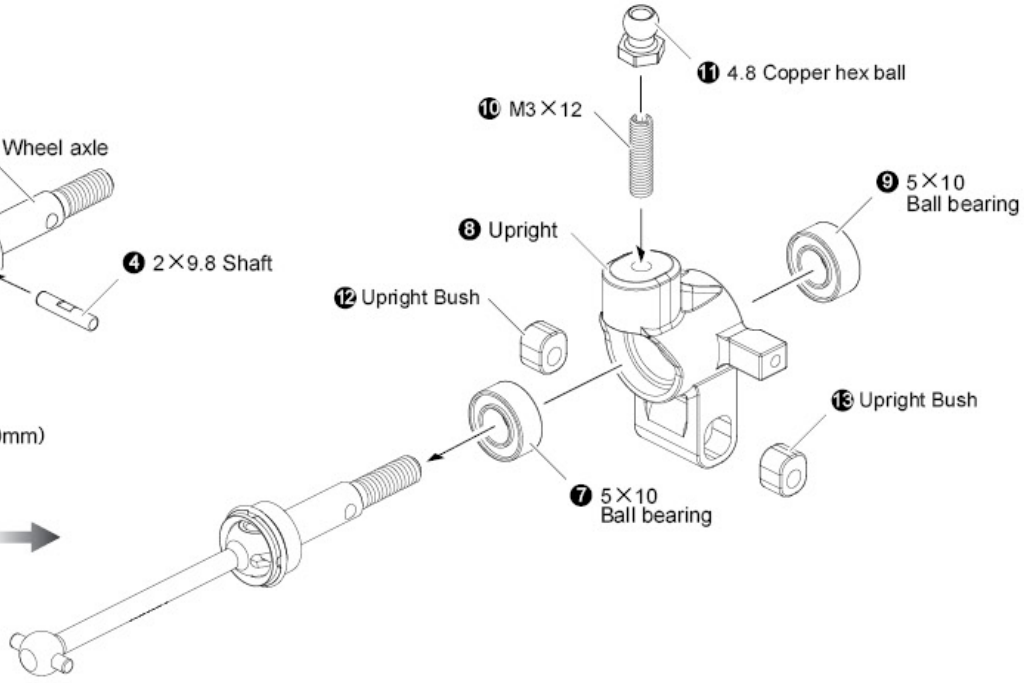

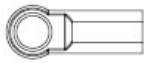
4.8 Adjuster ×4
拉桿頭

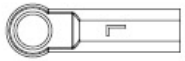
4.8 Adjuster L ×4
拉桿頭 L


M3×20 screw ×2
止付螺絲


M3×25 screw ×2
止付螺絲


M3×3 screw ×4
止付螺絲


2.6×22 Shaft ×2
插銷


2.6×25 Shaft ×2
插銷

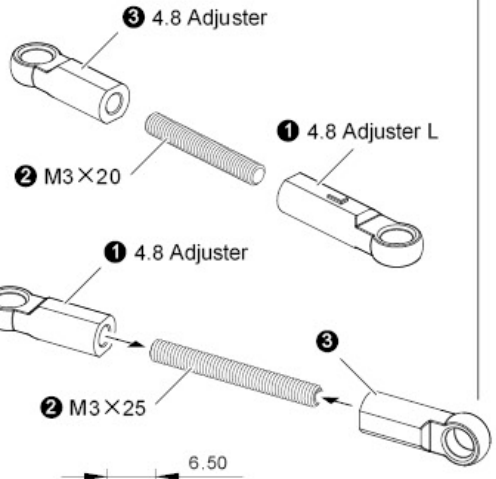

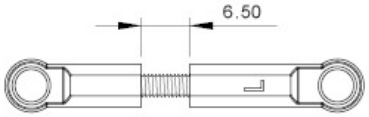

X2 Make 2
Front upper turnbuckle
前上拉桿

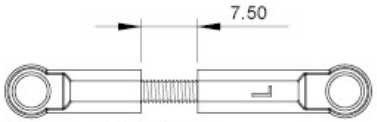

X2 Make 2
Rear upper turnbuckle
後上拉桿

STEP 1 Attaching front axle & upper turnbuckle
安裝前輪座&上拉桿

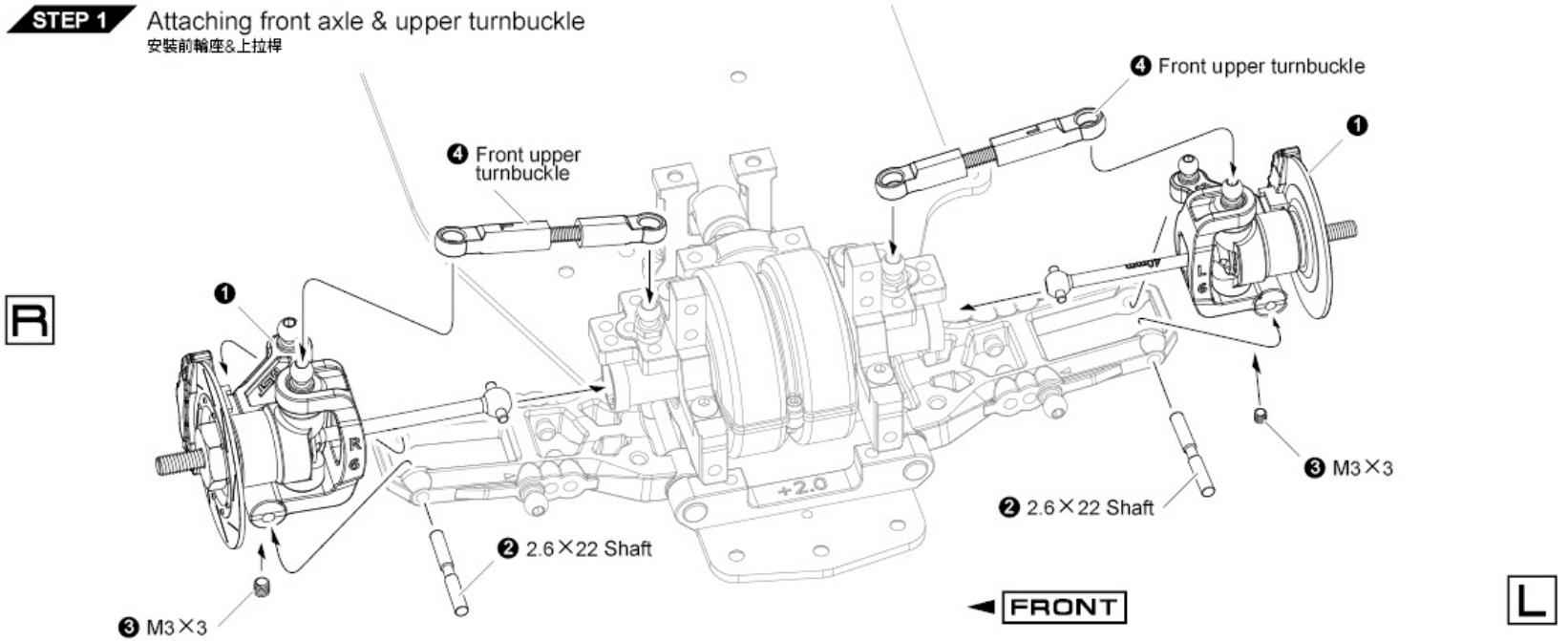

STEP 2 Attaching rear axle & upper turnbuckle
安裝後輪座&上拉桿

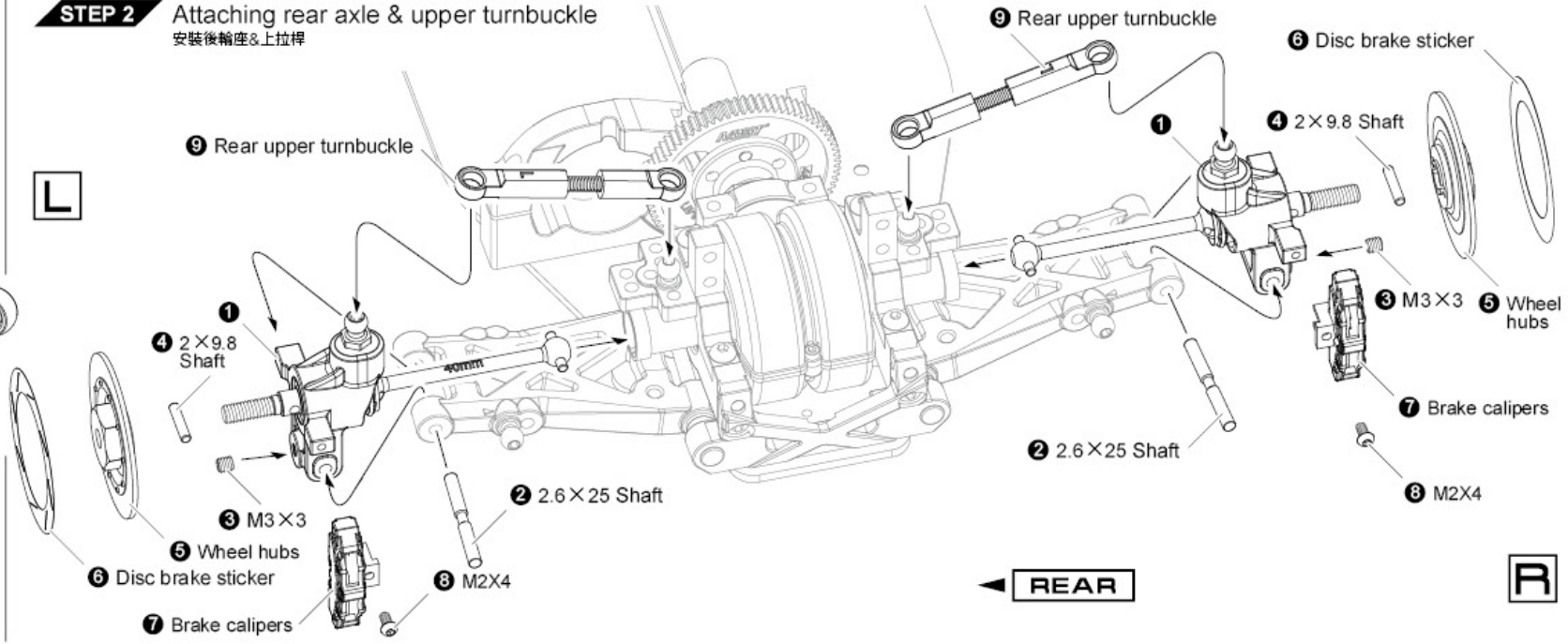

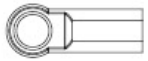
4.8 Adjuster ×6
拉桿頭


M3×25 screw ×1
止付螺絲


M3×20 screw ×2
止付螺絲

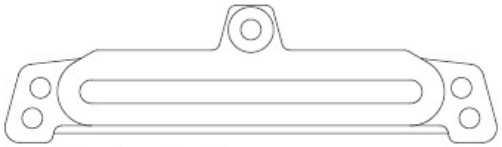
Steering rail ×1
轉向滑軌

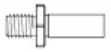
Rail post ×2
軸承支柱


Rail pulley ×2
轉向滑輪


Rail spacer ×2
轉向滑輪墊片


3×5×0.3 Spacer ×2
墊片


M2×4 screw ×2
圓頭螺絲


4.8×4.5 Copper ball connector ×3
銅製球頭螺絲

STEP 1 Steering turnbuckle assembly
轉向拉桿組裝

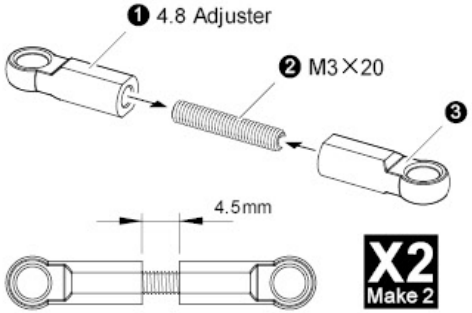

STEP 2 Servo saver turnbuckle assembly
伺服拉桿組裝

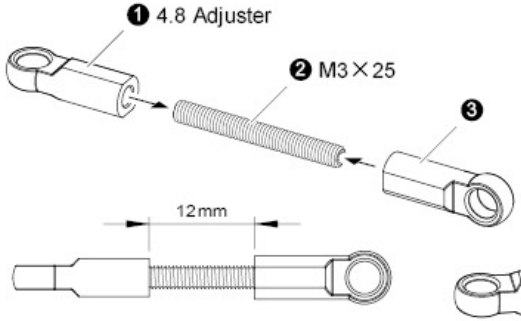

STEP 3 Steering rail assembly
轉向滑軌組裝

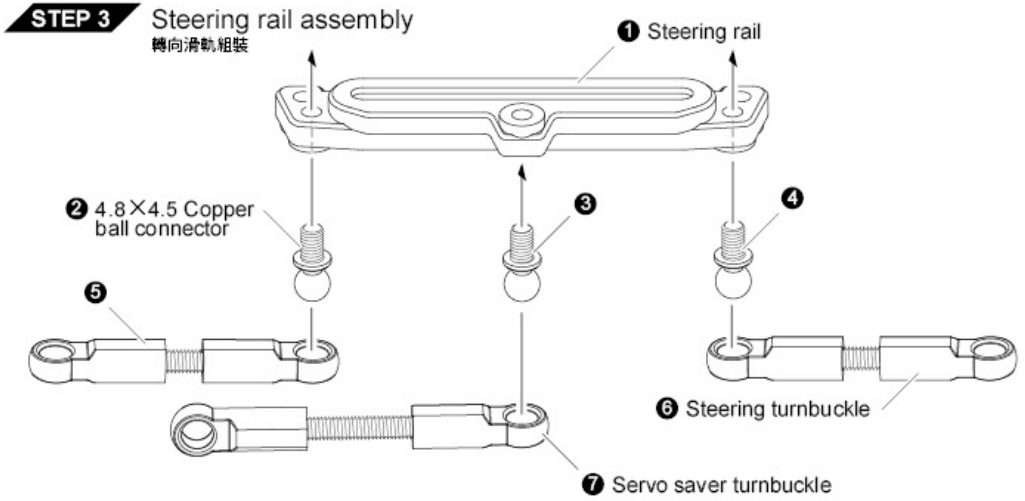

STEP 4 Attaching steering rail
安裝轉向滑軌

MIDDLE SHAFT & DAMPER STAY
中傳軸 & 避震架

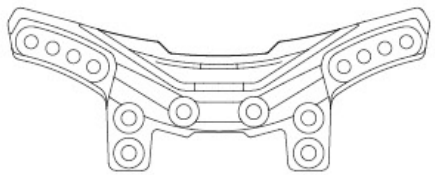

XXX Front damper stay ×1
XXX前避震架

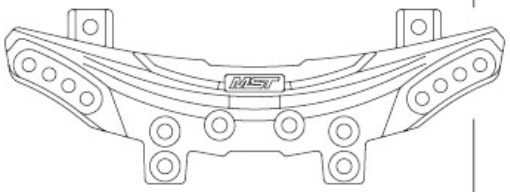

XXX Rear damper stay ×1
XXX後避震架



Alum. propeller shaft ×1
鋁合金中傳軸



Propeller shaft joint ×1
中軸接杯



M2×8 screw ×1
圓頭螺絲(半牙)



2×9.8 Shaft ×2
插銷



M3×3 screw ×2
止付螺絲



M3×8 screw ×8
圓頭螺絲



6.5×2 Sponge ×1
泡棉

STEP 1 Attaching middle shaft
安裝中傳軸

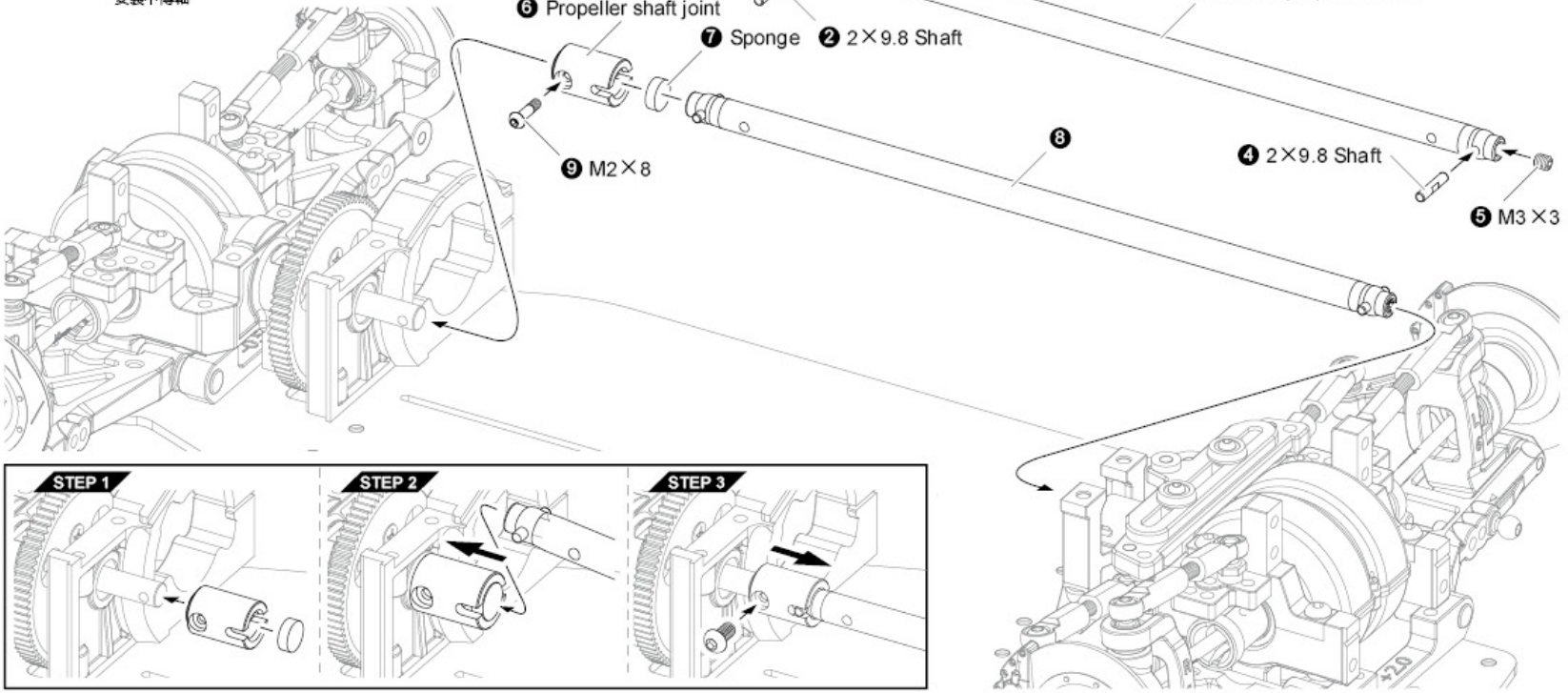

STEP 2 Attaching front damper stay
安裝前避震架

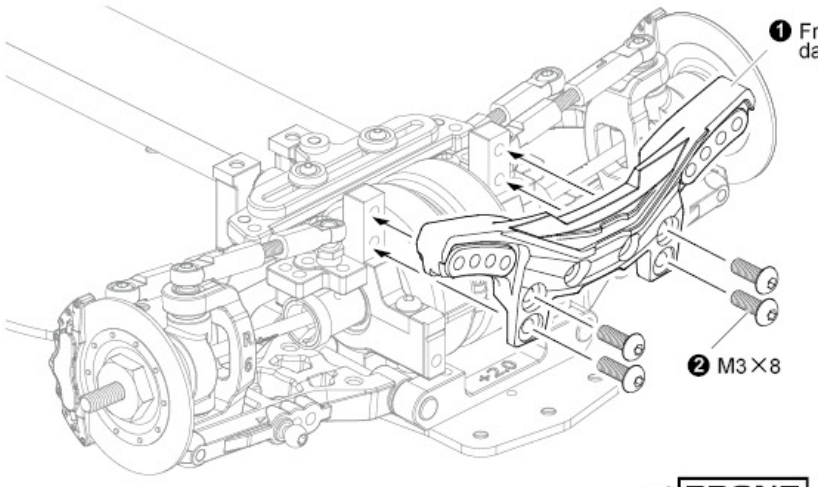

STEP 3 Attaching rear damper stay
安裝後避震架

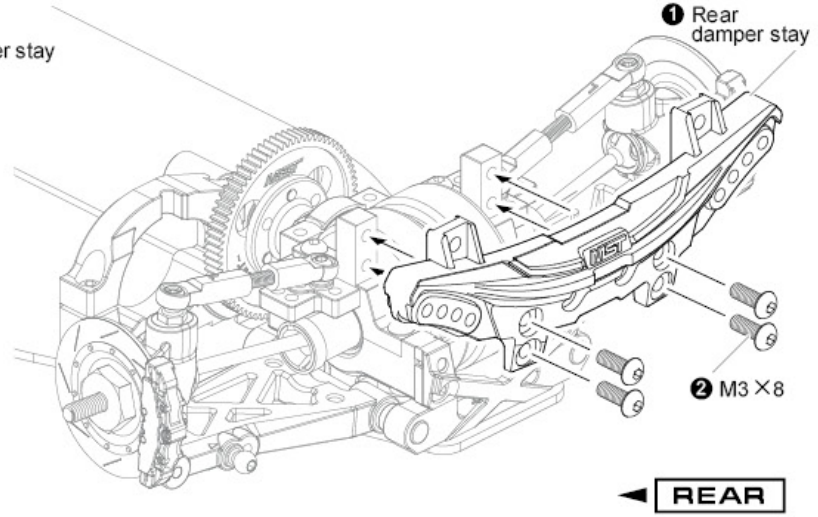



XXX Eccentric motor mount ×1
XXX 偏心式馬達固定座



3×10 Screw ×1
自攻圓頭螺絲



M3×8 screw ×2
圓頭螺絲



3×6×0.5 Spacer ×2
墊片

STEP 1 Attaching motor
安裝馬達

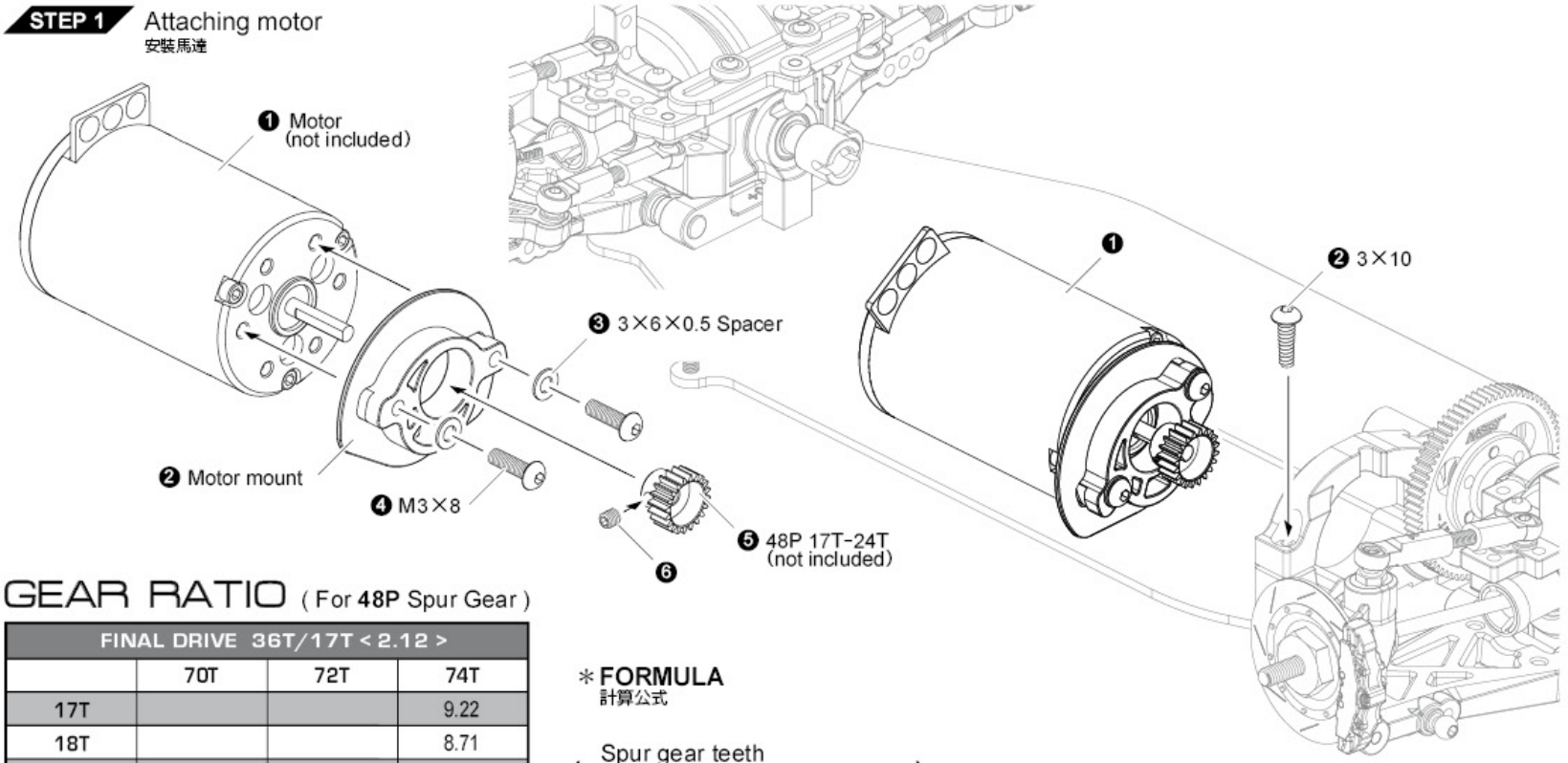

GEAR RATIO (For 48P Spur Gear)

FINAL DRIVE 36T/17T < 2.12 >			
	70T	72T	74T
17T			9.22
18T			8.71
19T		8.02	8.25
20T		7.62	7.84
21T	7.06	7.26	7.46
22T	6.74	6.93	7.12
23T	6.45	6.63	
24T	6.18		

＊**FORMULA**
計算公式

$$\left(\frac{\text{Spur gear teeth 大直齒}}{\text{Pinion gear teeth 馬達齒}} \times 2.12 \right) = \text{Gear ratio 終傳比}$$

※ More gear ratio, please refer to MST website.
更多終傳比，請上官網。
[www.rc-mst.com]

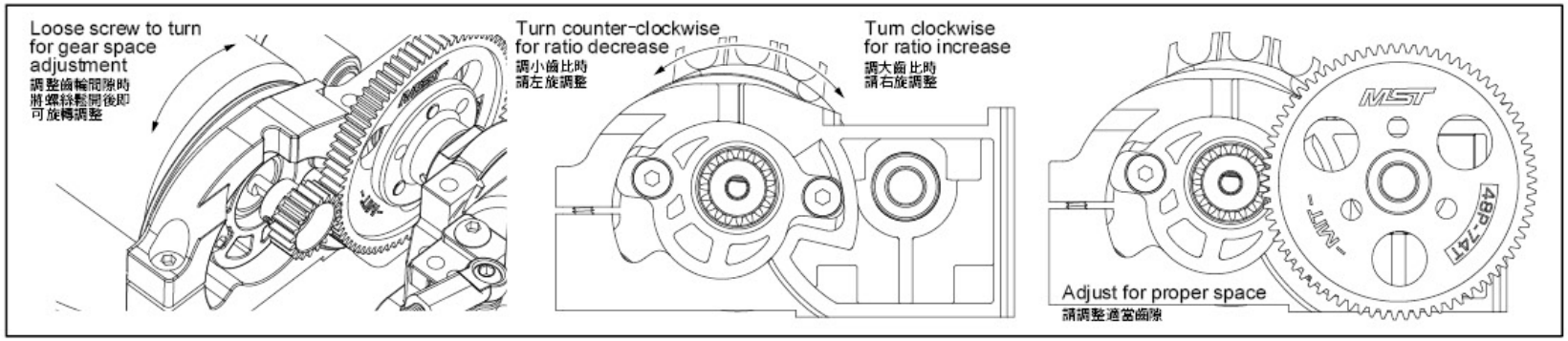

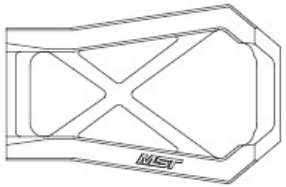

Gear box connector ×2
連結架

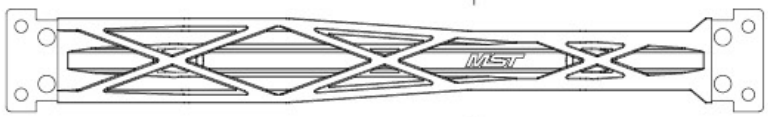

XXX Upper deck ×1
二樓板



3×10 Screw ×2
自攻圓頭螺絲



M3×6 screw ×8
圓頭螺絲



M3×8 screw ×2
圓頭螺絲

STEP 1 Upper deck assembly
二樓板組裝

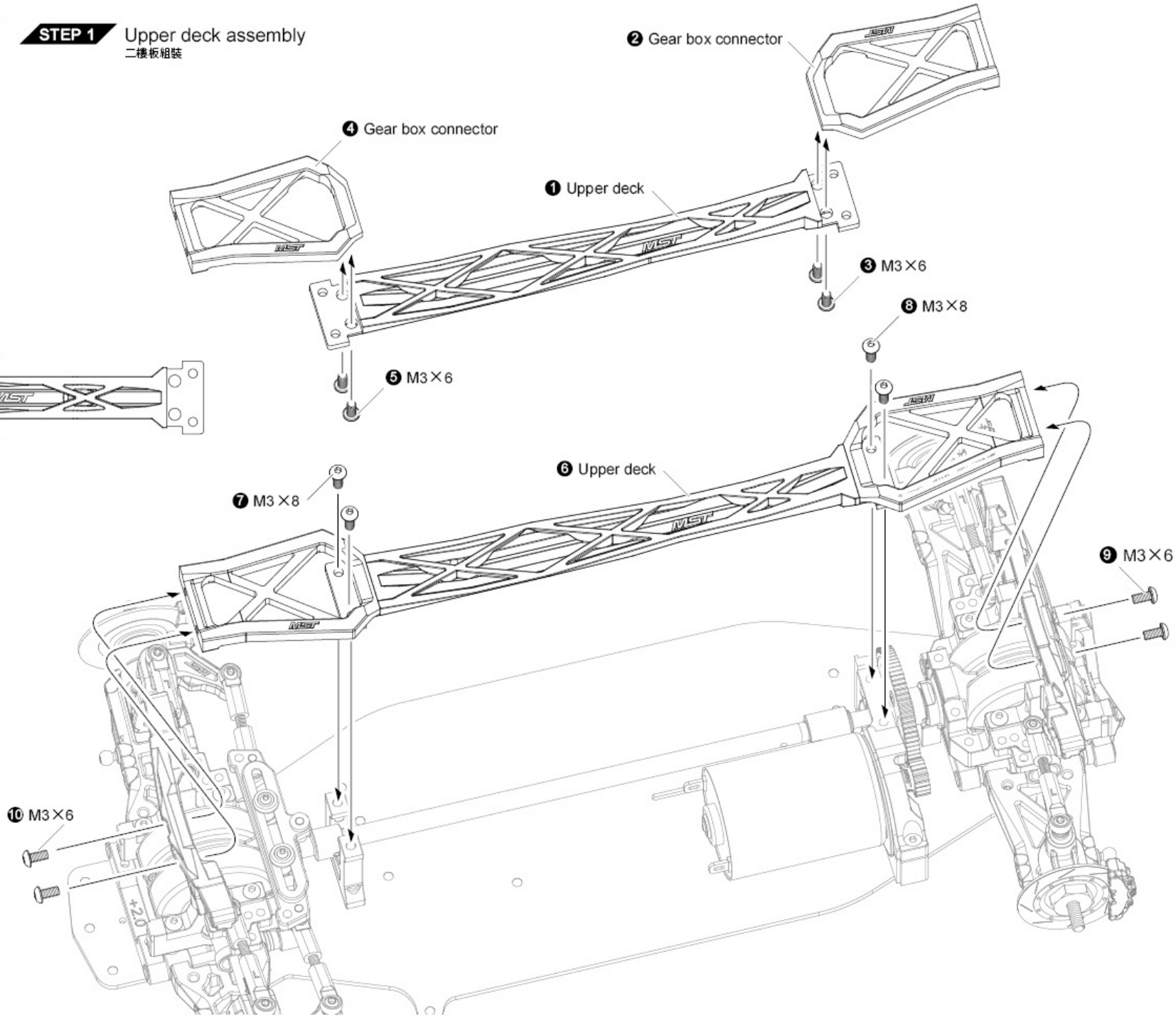

- 3×6×0.5 Spacer ×2 墊片
- M3×6 screw ×2 圓頭螺絲
- 4.8×4.5 Copper ball connector ×1 球頭螺絲
- M3×6 screw ×2 沉頭螺絲
- M3×16 screw ×1 沉頭螺絲
- Servo saver spring ×1 緩衝彈簧 9.0 (中-金)
- Servo mount ×2 伺服機座

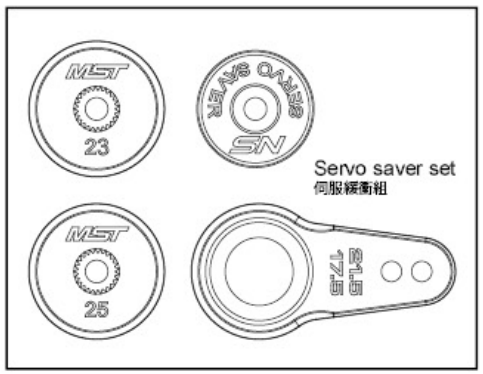

STEP 1 Steering servo assembly
轉向伺服機組裝

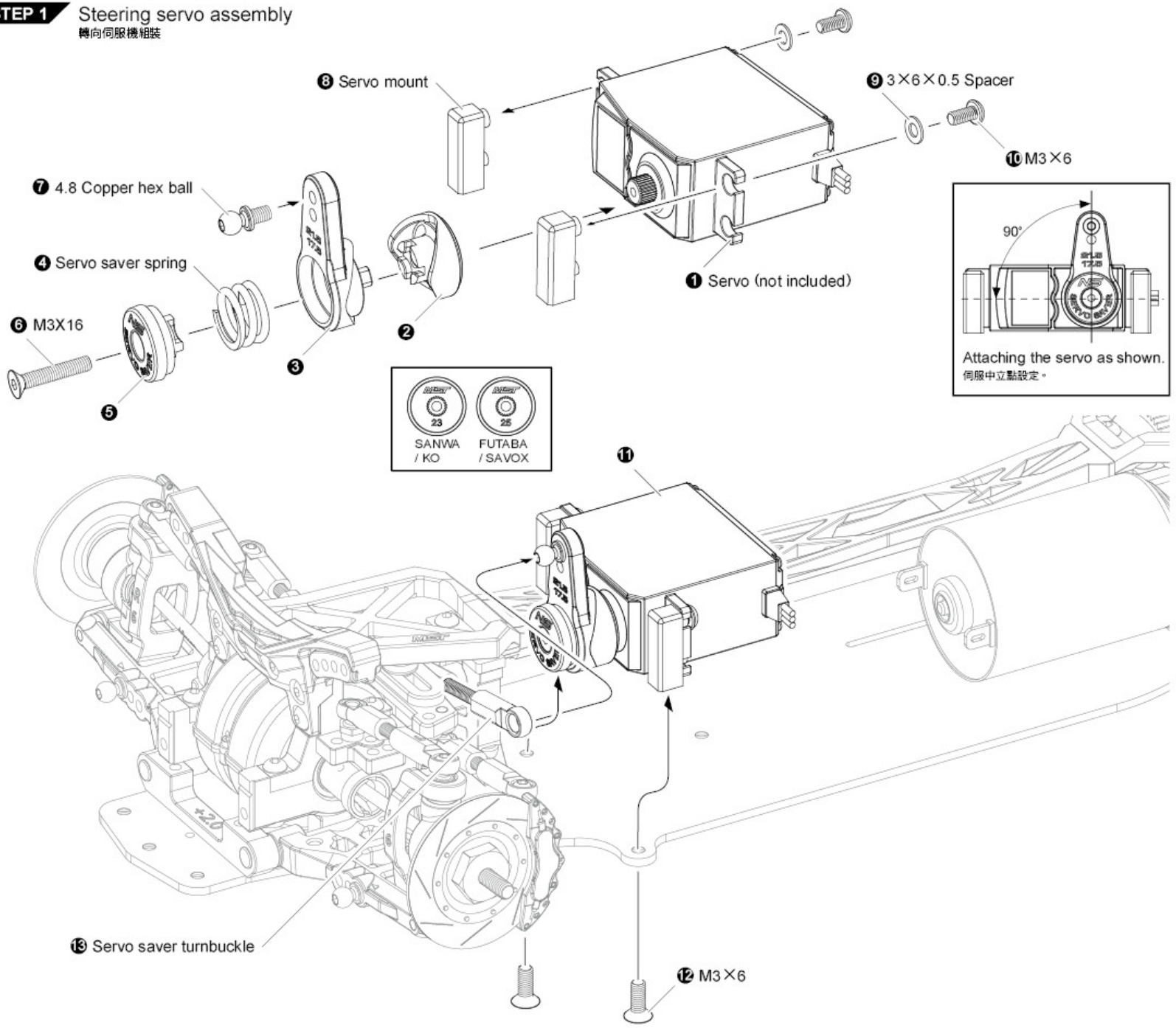

BATTERY MOUNT & ESC
電池座 & 電裝

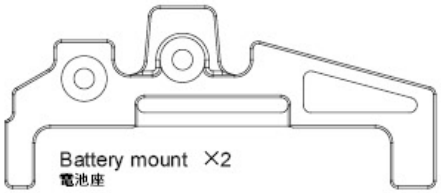

Battery mount ×2
電池座



M3×4 screw ×1
沉頭螺絲



M3×6 screw ×4
沉頭螺絲



Antenna holder ×1
天線管座

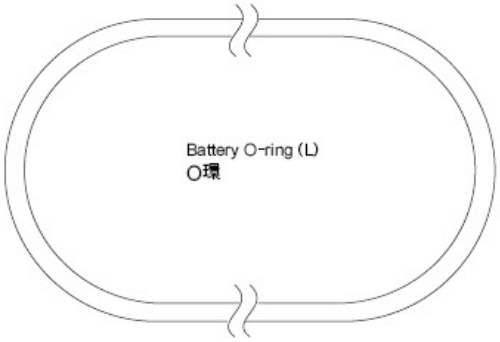

Battery O-ring (L)
O環

The assembly and conservation method may be different by specification of battery.
電池的安裝方式會因廠牌規格而有些微差異，電池的使用方式與保存方式，也會因電池的種類而有所不同。

Recommended battery measurement
L140×W49×H27mm (not exceed)
建議安裝（長140×寬49×高27mm）尺寸以內的電池！

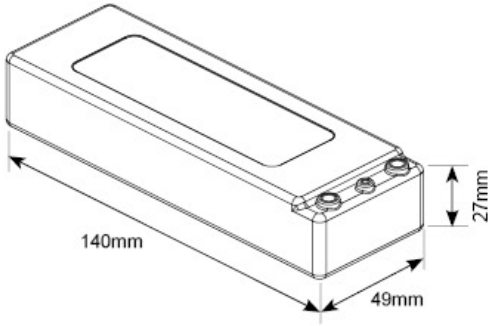

STEP 1 Attaching battery mount
安裝電池座

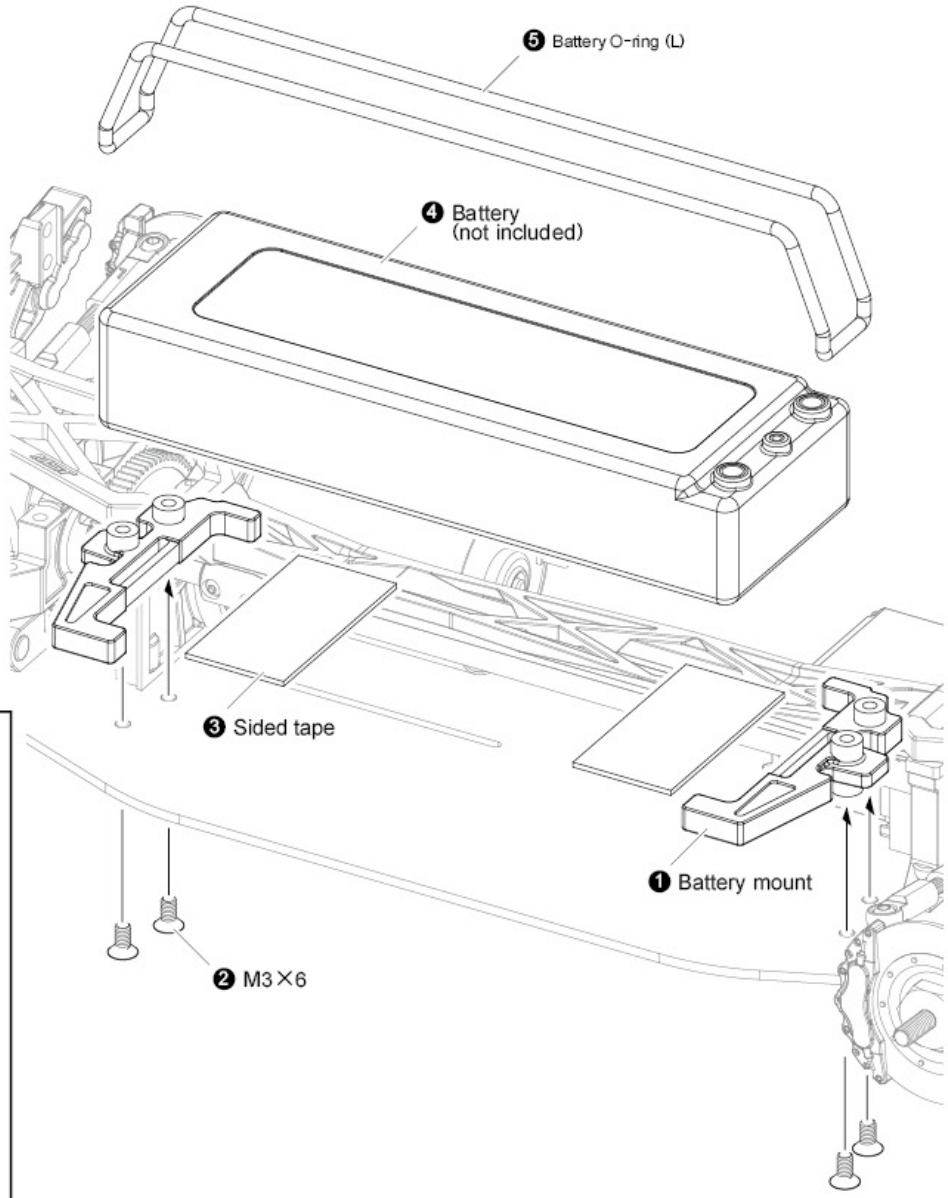

STEP 2 Attaching receiver & ESC
安裝接收機 & 電子變速器

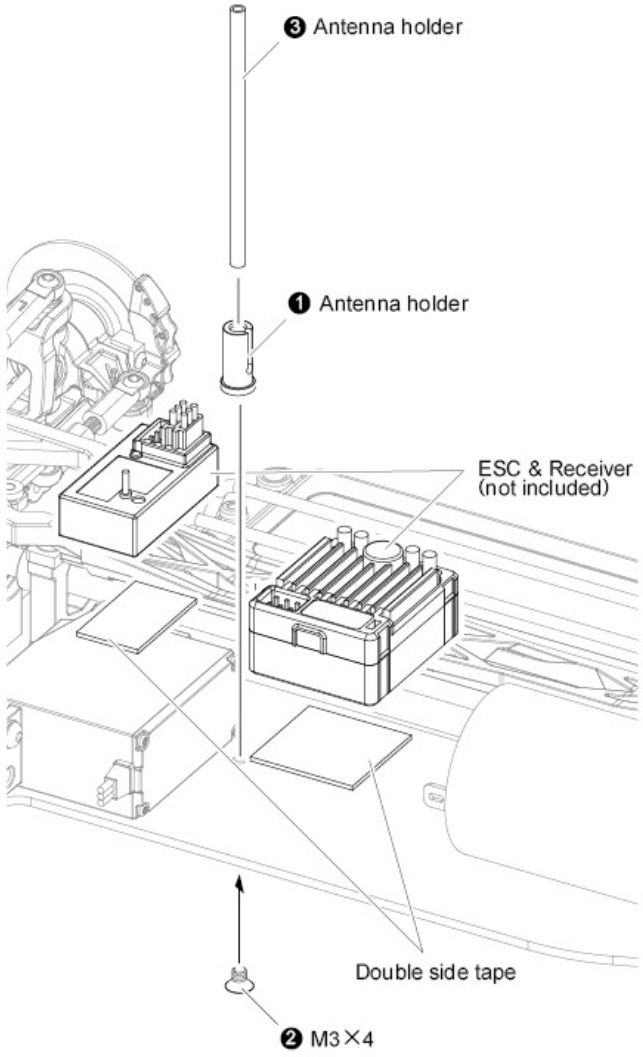

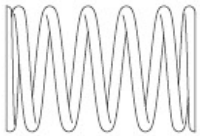
Coil spring 25mm (red) ×2
避震彈簧 25mm (紅)

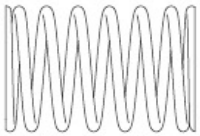
Coil spring 25mm (white) ×2
避震彈簧 25mm (白)

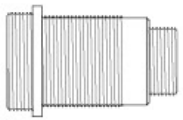
Damper cylinder ×4
避震筒身

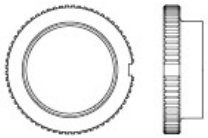
Spring retainer (red) ×4
避震器調整環 (紅)


Piston rod ×4
避震軸心


Piston ×4
避震活塞

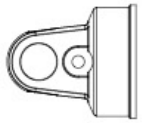
Cylinder cap ×4
避震器上蓋


Damper adjuster ×4
避震器拉桿


Rod guide cap ×4
避震器下蓋

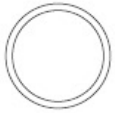
10.8×0.9 O-ring ×4
O環

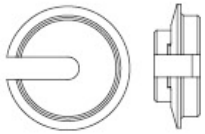
Damper retainer ×4
避震器彈簧座

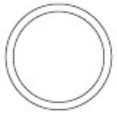
12×1 O-ring ×4
O環


Oil seal ×4
避震器氣室


Damper O-ring P3 ×4
避震器O環


Rod guide ×4
避震器下蓋墊片


E-clip ×8
E形扣

STEP 1 Damper assembly
避震器組裝

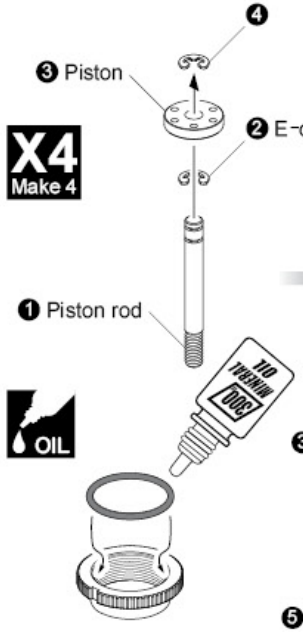

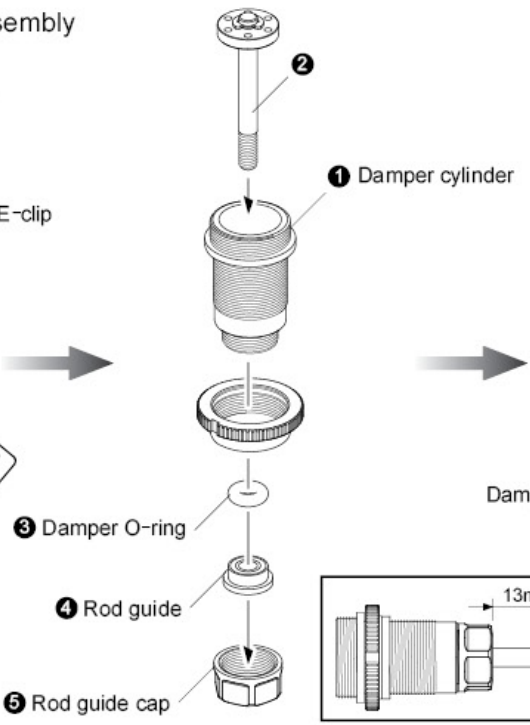

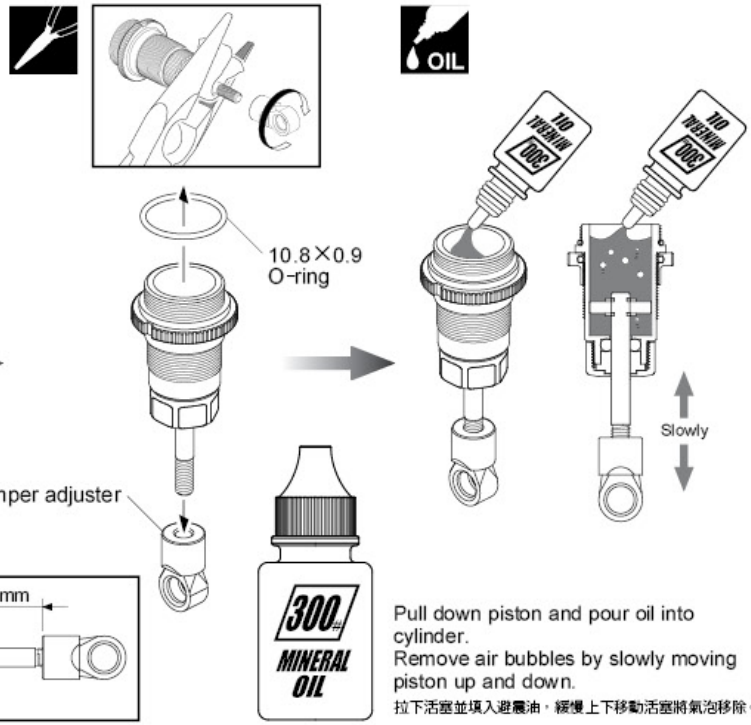

Pull down piston and pour oil into cylinder.
Remove air bubbles by slowly moving piston up and down.
拉下活塞並填入避震油，緩慢上下移動活塞將氣泡移除。

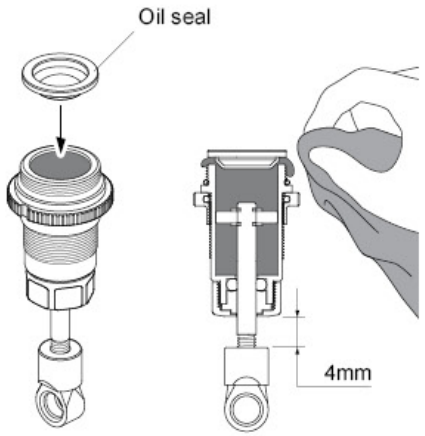

Pull down piston rod 4mm, attach cylinder cap and absorb oil overflow with tissue paper.
將軸心下拉4mm後，蓋上避震器上蓋並以面紙拭去溢出的矽油。

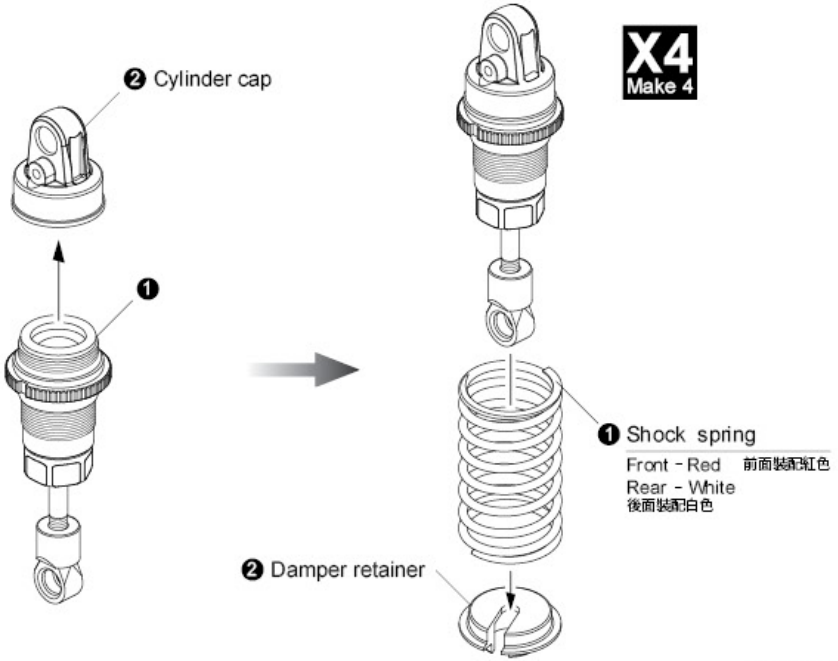

M3×5 screw ×4
沉頭螺絲

4.8 Copper hex ball ×4
外六角球頭

M3×10 screw ×2
止付螺絲

M3×8 screw ×2
止付螺絲

3×6×2 Spacer ×2
墊片

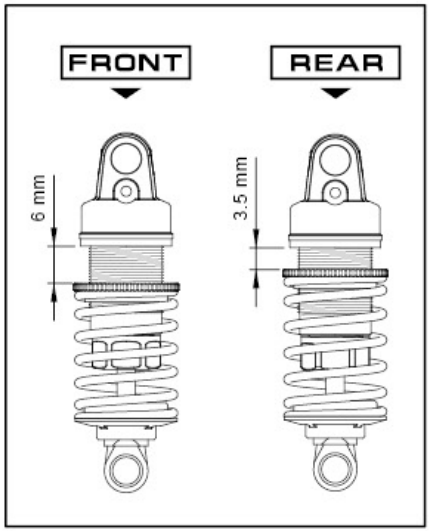

STEP 1 Attaching front damper
安裝前避震器

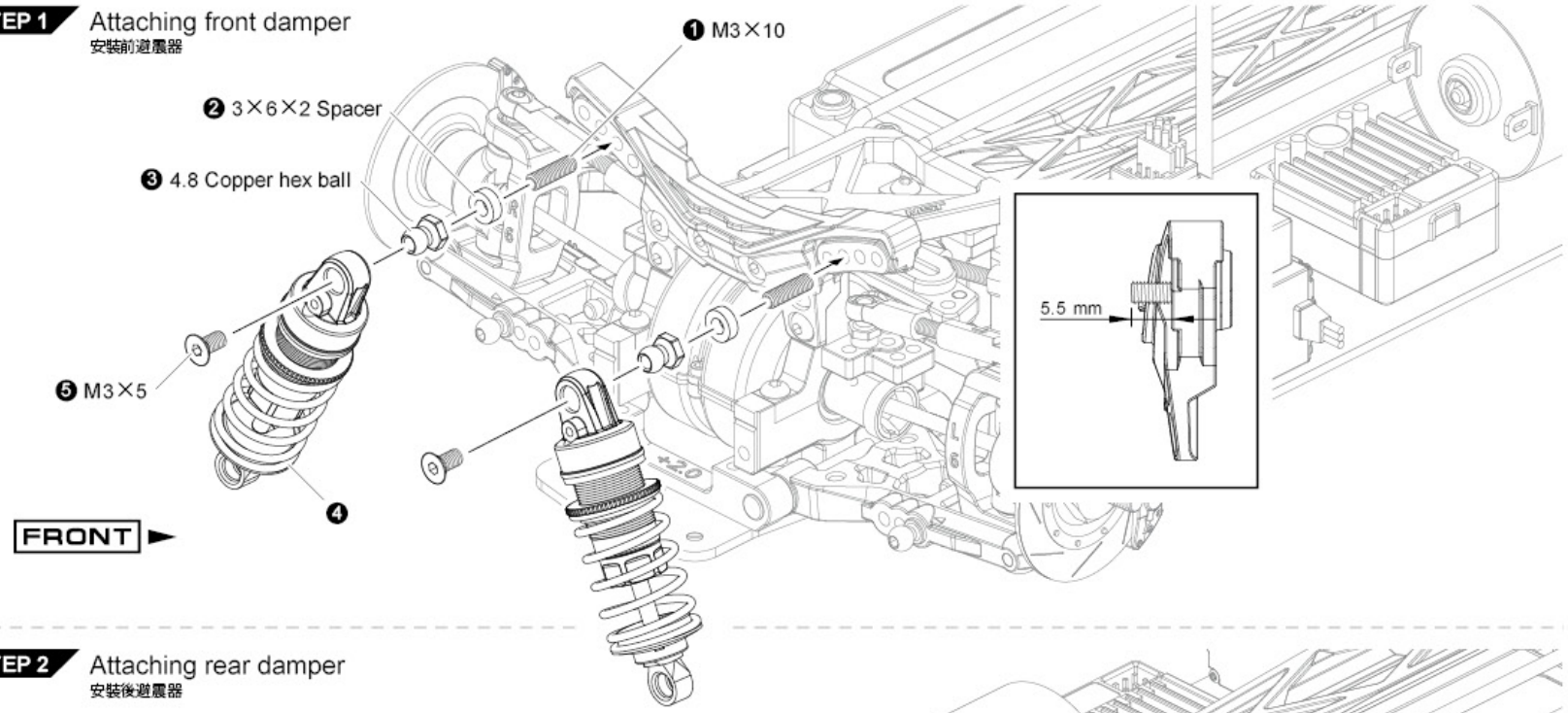

STEP 2 Attaching rear damper
安裝後避震器

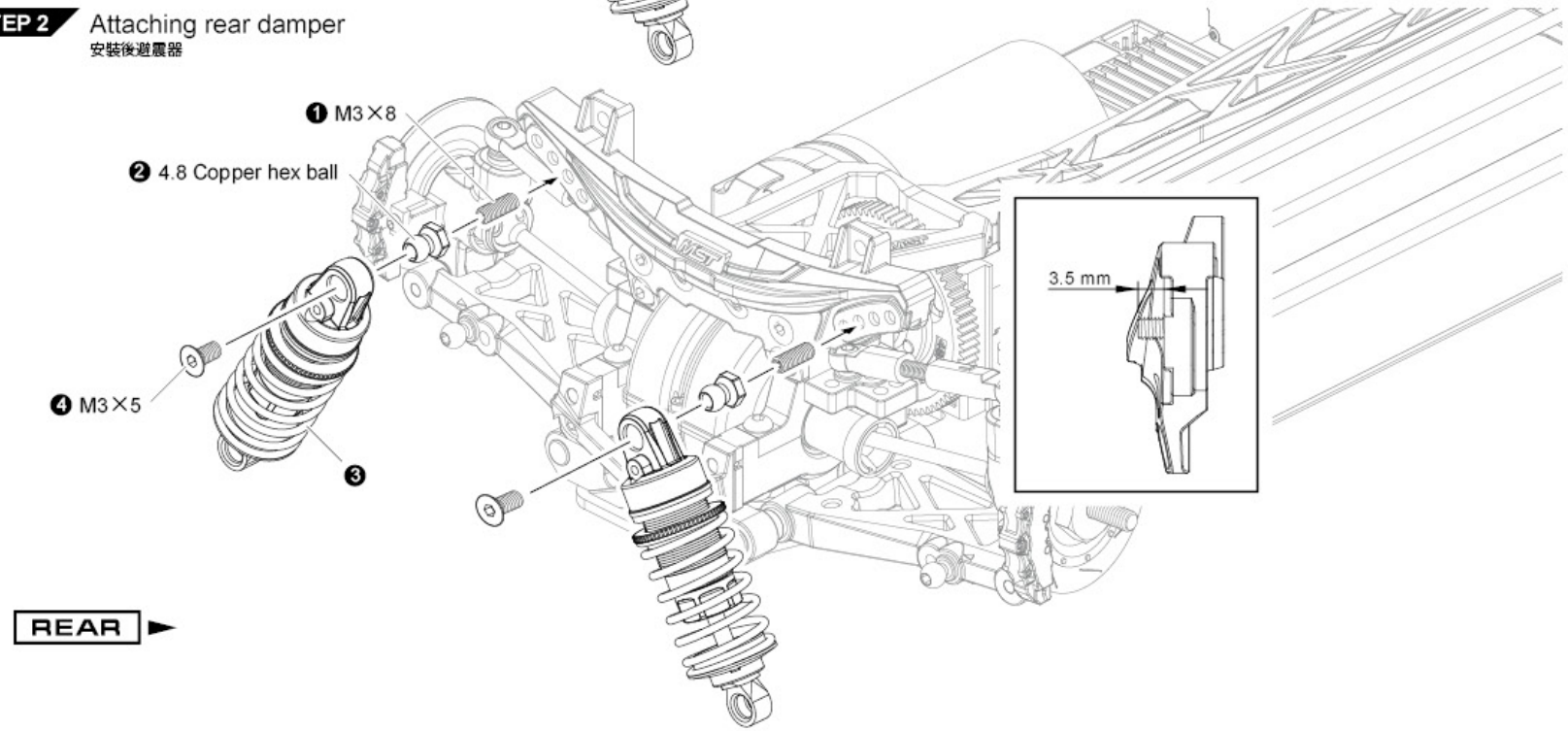

STEP 1 Attaching wheels
安裝胎框

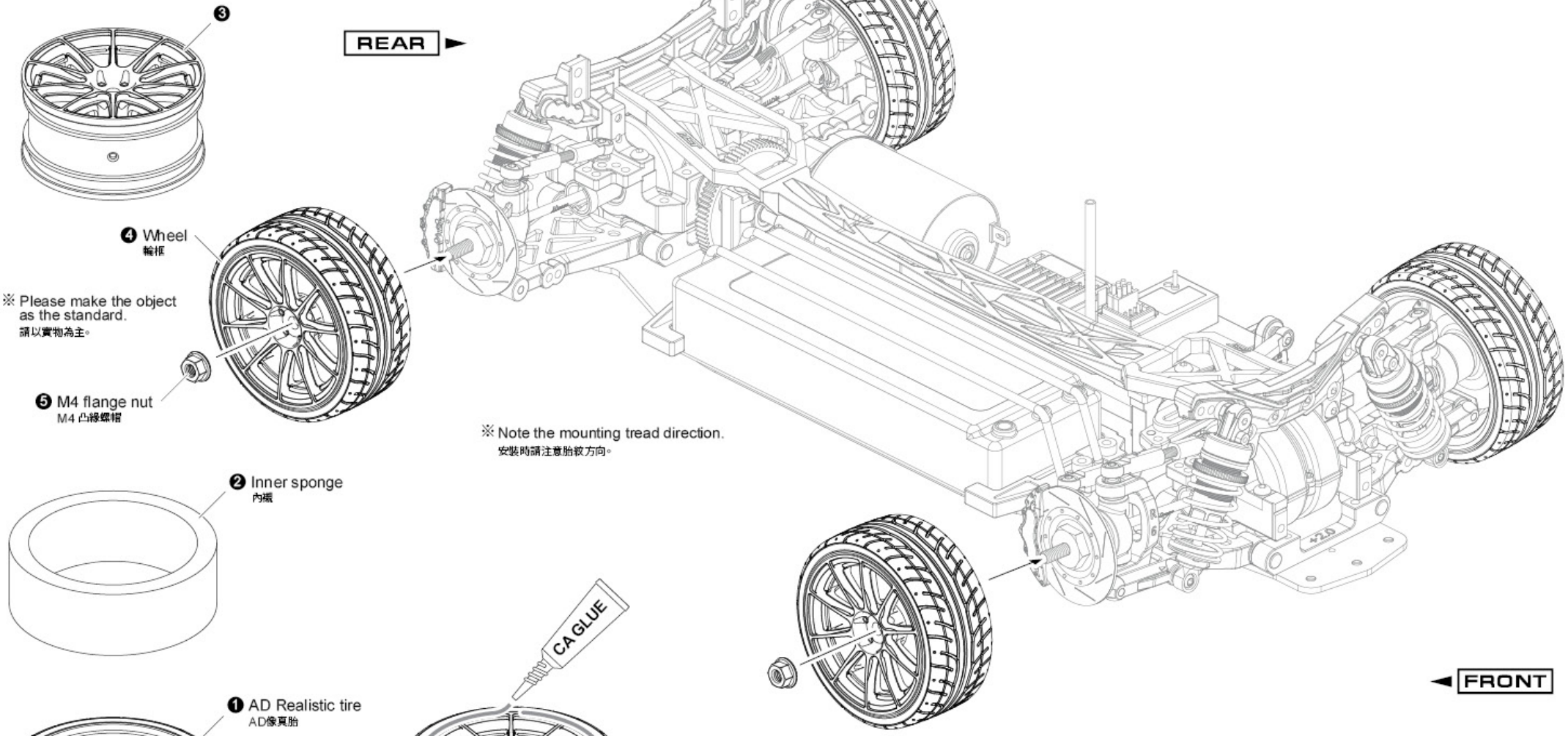

※ Adhesive.
上膠固定。

※ Glue on both sides.
兩側都須上膠。

※ Please operate it at ventilated place.
請於通風處進行上膠。

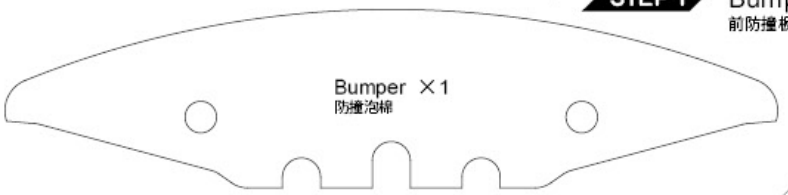

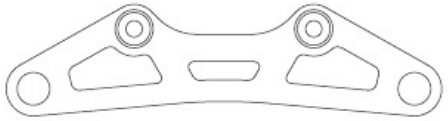
Bumper support ×1
防撞板上座

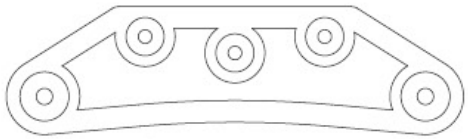
Bumper mount ×1
防撞板下座


Front body mount ×2
前車殼支柱


Rear body mount ×2
後車殼支柱

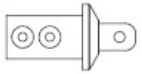
Body mount cover M ×2
支柱套 M

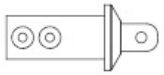
Body mount cover L ×2
支柱套 L


Body post extension mount 4mm ×2
車殼柱延伸座 4mm


R-clip ×2
R形扣


M2×8 screw ×4
圓頭螺絲(半牙)


M3×12 screw ×2
圓頭螺絲


M3×8 screw ×2
圓頭螺絲


M3×8 screw ×5
沉頭螺絲

STEP 1 Bumper assembly
前防撞板組裝

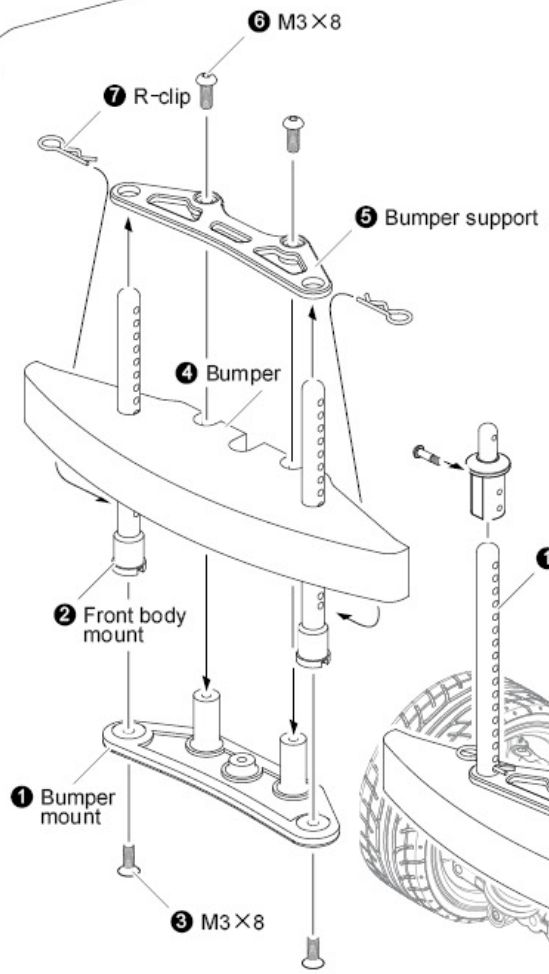

STEP 2 Attaching body mount
安裝車殼支柱

Please set the body mounts according to the car body.
請依車殼高度安裝車殼固定座。

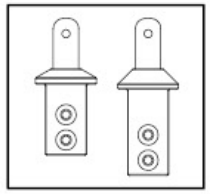

PARTS

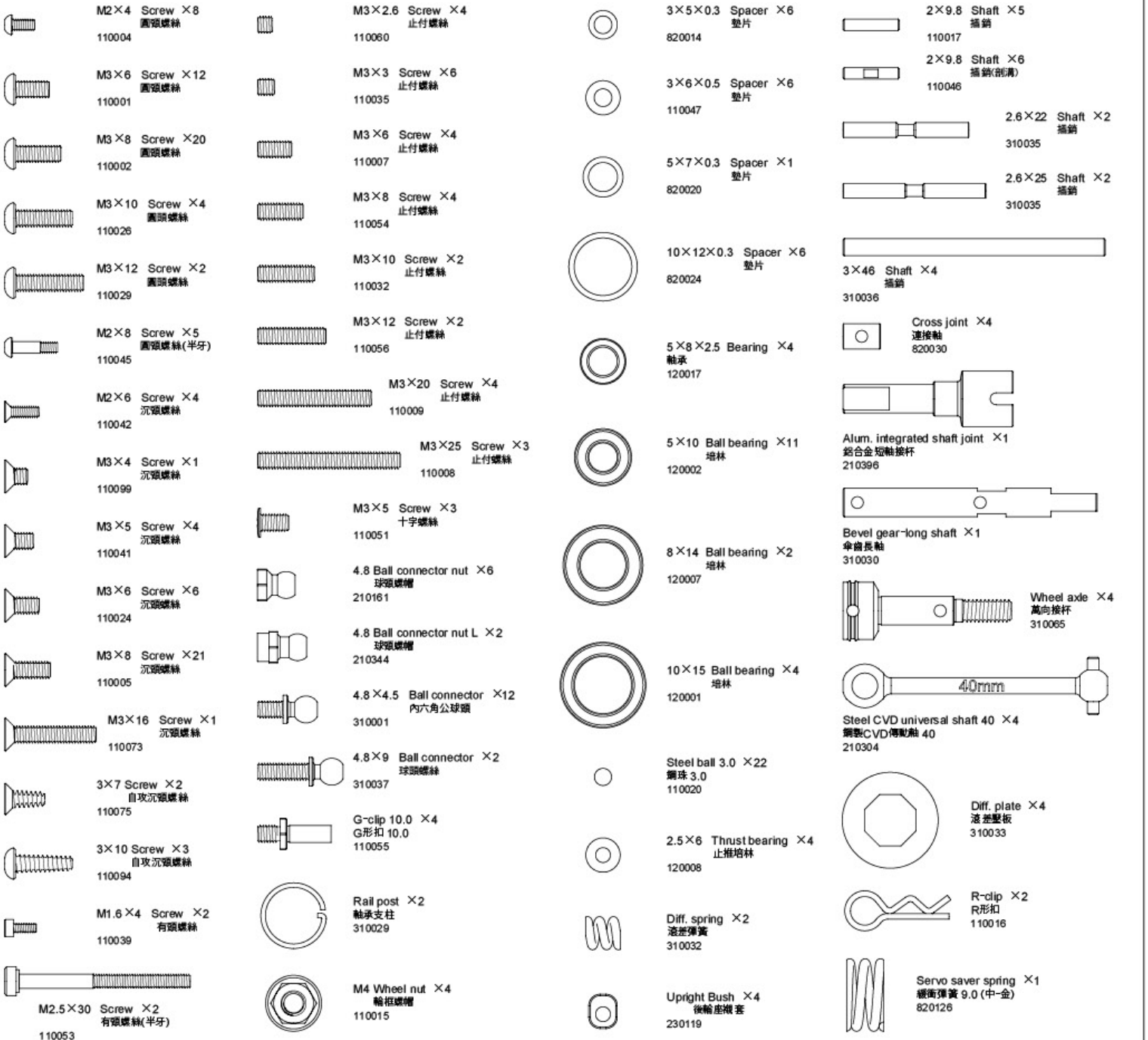
M2×4 Screw ×8
圓頭螺絲
110004
M3×6 Screw ×12
圓頭螺絲
110001
M3×8 Screw ×20
圓頭螺絲
110002
M3×10 Screw ×4
圓頭螺絲
110026
M3×12 Screw ×2
圓頭螺絲
110029
M2×8 Screw ×5
圓頭螺絲(半牙)
110045
M2×6 Screw ×4
沉頭螺絲
110042
M3×4 Screw ×1
沉頭螺絲
110099
M3×5 Screw ×4
沉頭螺絲
110041
M3×6 Screw ×6
沉頭螺絲
110024
M3×8 Screw ×21
沉頭螺絲
110005
M3×16 Screw ×1
沉頭螺絲
110073
3×7 Screw ×2
自攻沉頭螺絲
110075
3×10 Screw ×3
自攻沉頭螺絲
110094
M1.6×4 Screw ×2
有頭螺絲
110039
M2.5×30 Screw ×2
有頭螺絲(半牙)
110053
M3×2.6 Screw ×4
止付螺絲
110060
M3×3 Screw ×6
止付螺絲
110035
M3×6 Screw ×4
止付螺絲
110007
M3×8 Screw ×4
止付螺絲
110054
M3×10 Screw ×2
止付螺絲
110032
M3×12 Screw ×2
止付螺絲
110056
M3×20 Screw ×4
止付螺絲
110009
M3×25 Screw ×3
止付螺絲
110008
M3×5 Screw ×3
十字螺絲
110051
4.8 Ball connector nut ×6
球頭螺帽
210161
4.8 Ball connector nut L ×2
球頭螺帽
210344
4.8×4.5 Ball connector ×12
內六角公球頭
310001
4.8×9 Ball connector ×2
球頭螺絲
310037
G-clip 10.0 ×4
G形扣 10.0
110055
Rail post ×2
軸承支柱
310029
M4 Wheel nut ×4
輪框螺帽
110015
3×5×0.3 Spacer ×6
墊片
820014
3×6×0.5 Spacer ×6
墊片
110047
5×7×0.3 Spacer ×1
墊片
820020
10×12×0.3 Spacer ×6
墊片
820024
5×8×2.5 Bearing ×4
軸承
120017
5×10 Ball bearing ×11
培林
120002
8×14 Ball bearing ×2
培林
120007
10×15 Ball bearing ×4
培林
120001
Steel ball 3.0 ×22
鋼珠 3.0
110020
2.5×6 Thrust bearing ×4
止推培林
120008
Diff. spring ×2
滾差彈簧
310032
Upright Bush ×4
後輪座襯套
230119
2×9.8 Shaft ×5
插銷
110017
2×9.8 Shaft ×6
插銷(剖溝)
110046
2.6×22 Shaft ×2
插銷
310035
2.6×25 Shaft ×2
插銷
310035
3×46 Shaft ×4
插銷
310036
Cross joint ×4
連接軸
820030
Alum. integrated shaft joint ×1
鋁合金短軸接杯
210396
Bevel gear-long shaft ×1
傘齒長軸
310030
Wheel axle ×4
萬向接杯
310065
40mm
Steel CVD universal shaft 40 ×4
鋼製CVD傳動軸 40
210304
Diff. plate ×4
滾差壓板
310033
R-clip ×2
R形扣
110016
Servo saver spring ×1
緩衝彈簧 9.0 (中-金)
820126
Coil spring 25mm (red) ×2
避震彈簧 25mm (紅)
210266-3
Damper cylinder ×4
避震筒身
210071
Cylinder cap ×4
避震器上蓋
210057
Rod guide cap ×4
避震器下蓋
210057
Damper retainer ×4
避震器彈簧座
820079
Oil seal ×4
避震器氣室
130004
Rod guide ×4
避震器下蓋墊片
210235
Coil spring 25mm (white) ×2
避震彈簧 25mm (白)
210266-4
Piston rod ×4
避震軸心
310008
Piston ×4
避震活塞
210235
Damper adjuster ×4
避震器拉桿
820079
10.8×0.9 O-ring ×4
O環
130032
12×1 O-ring ×4
O環
130049
Spring retainer (red) ×4
避震器調整環 (紅)
310106R
E-clip ×10
E形扣
110013
Damper O-ring P3 ×4
避震器O環
130028
M3×4 screw ×4
沉頭螺絲
110099

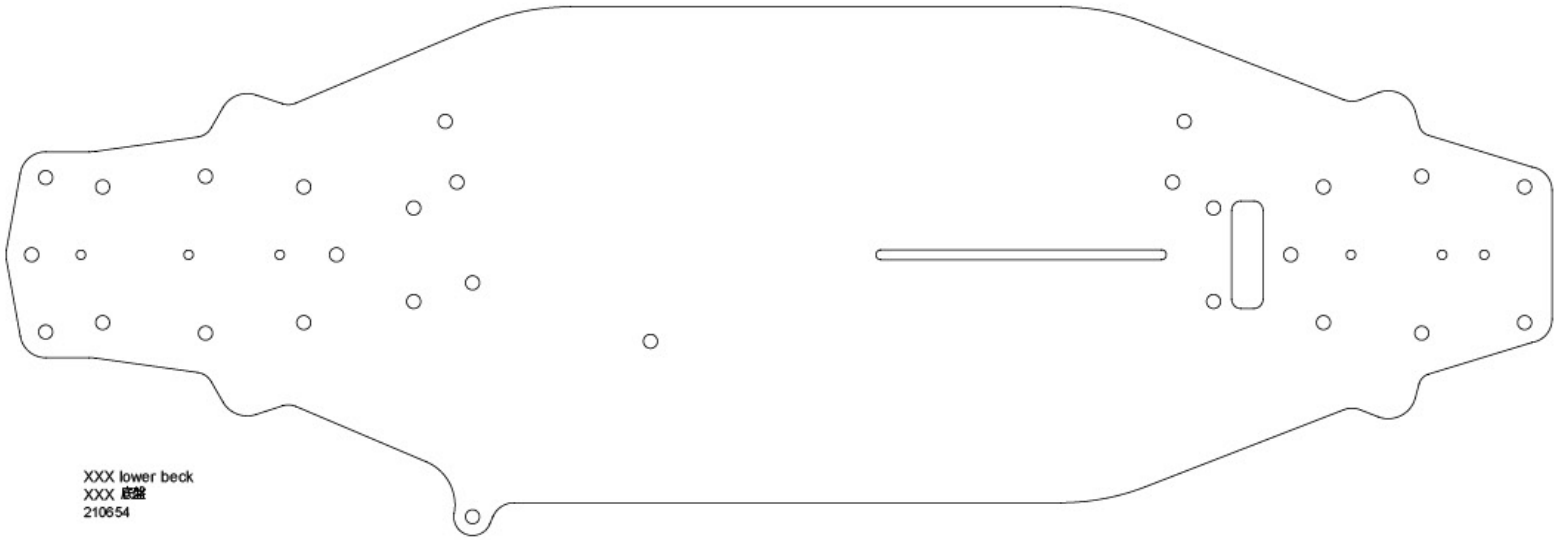

XXX lower beck
XXX 底盤
210654

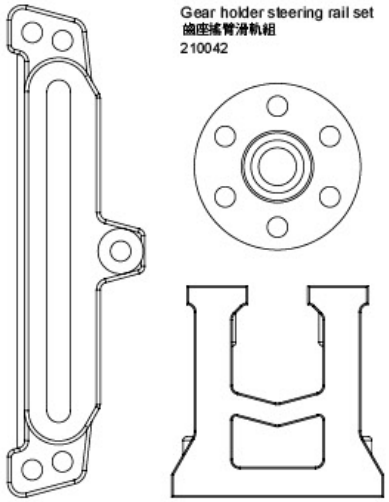

Gear holder steering rail set
齒座搖臂滑軌組
210042

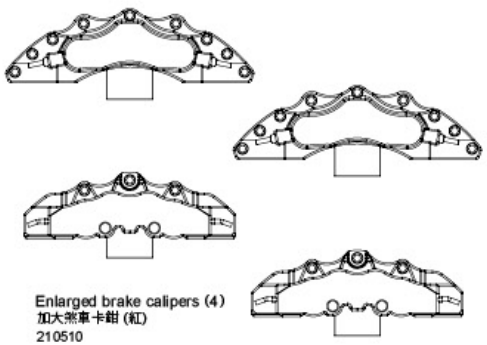

Enlarged brake calipers (4)
加大煞車卡鉗 (紅)
210510

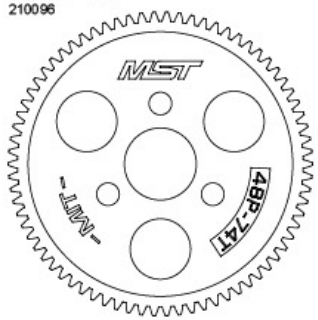

Spur gear 48P-74T
大直齒 48P-74T
210096

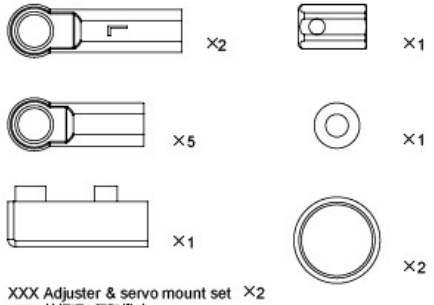

XXX Adjuster & servo mount set ×2
XXX 拉桿頭&伺服機座
210095

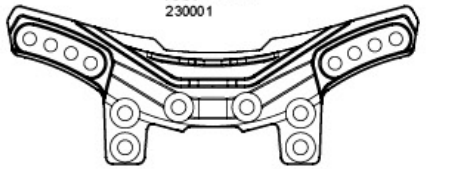

XXX Front damper stay
XXX 前避震架
230001



XXX Rear damper stay
XXX 後避震架
230002

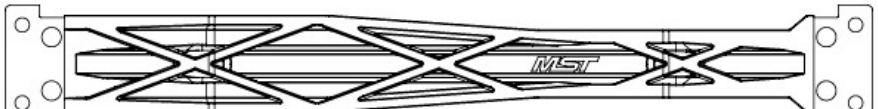



XXX Upper deck & battery strap
XXX 二樓板&電池壓板組
210100

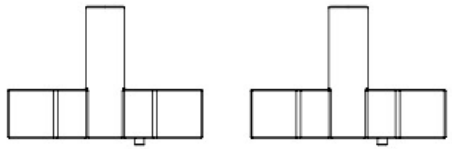

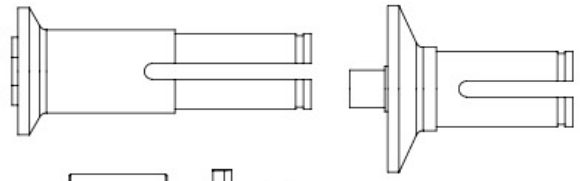

Joint set ×2
接杆組
210040

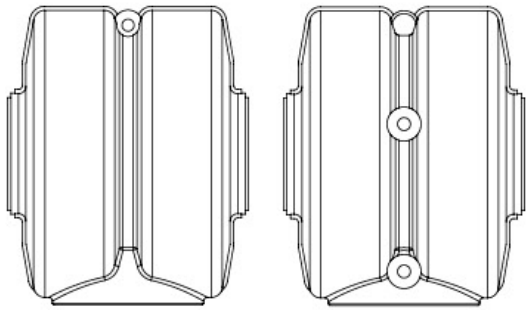

Bevel diff dust cover ×2
傘差防塵殼
210027

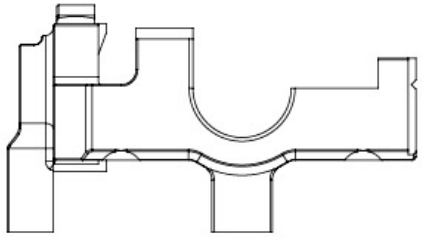

Bevel gear box set ×2
傘齒座組
210041

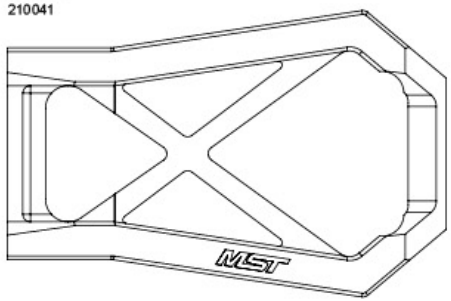

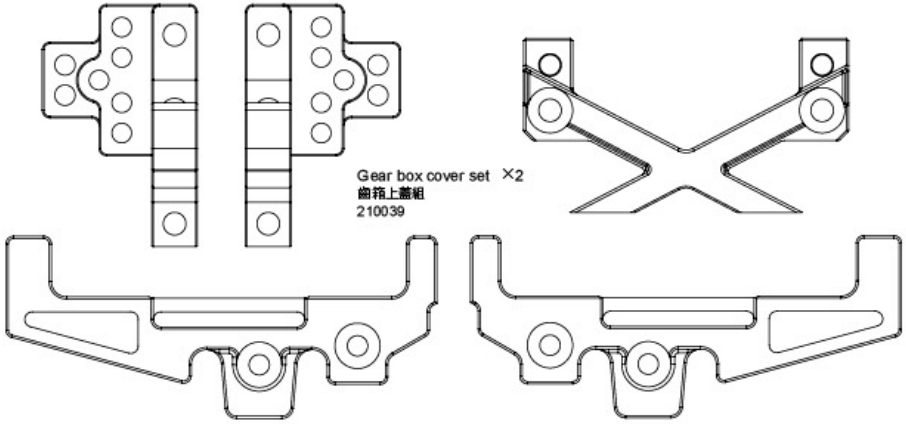

Gear box cover set ×2
齒箱上蓋組
210039

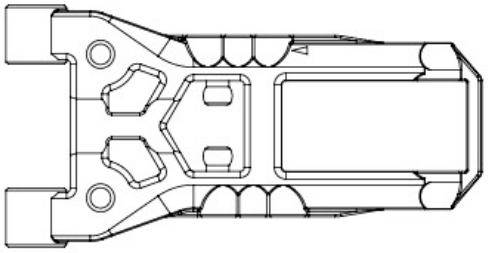

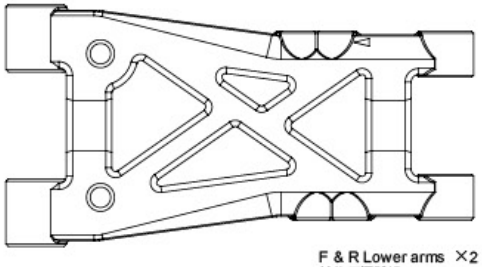

F & R Lower arms ×2
前後下擺臂組
210045

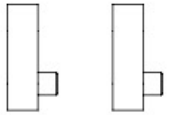

Body post extension mount 4mm
車殼柱延伸座 4mm
210029

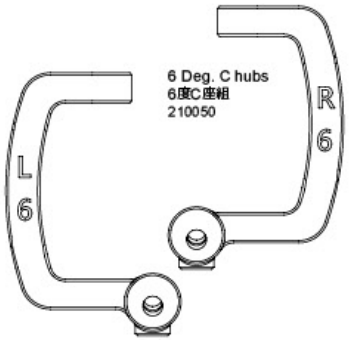

6 Deg. C hubs
6度C座組
210050

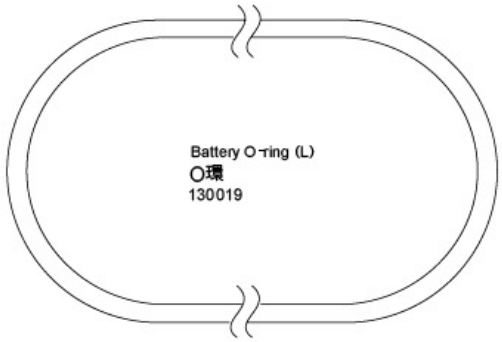

Battery O-ring (L)
O環
130019

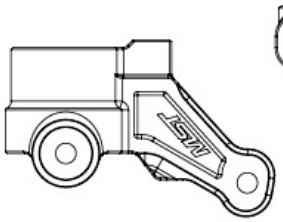

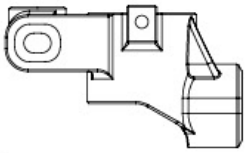

F & R Wheel hubs ×2
前後輪座組
210049

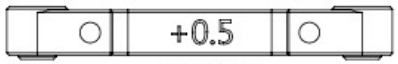

Lower arm mount +0.5 ×1
下擺臂座 +0.5
210048

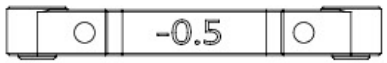

Lower arm mount -0.5 ×1
下擺臂座 -0.5
210048

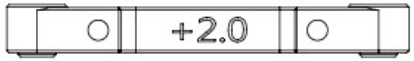

Lower arm mount +2.0 ×2
下擺臂座 +2.0
210048

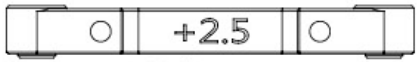

Lower arm mount +2.5 ×1
下擺臂座 +2.5
210048

Univeral servo saver set
通用型伺服 緩衝組
820042



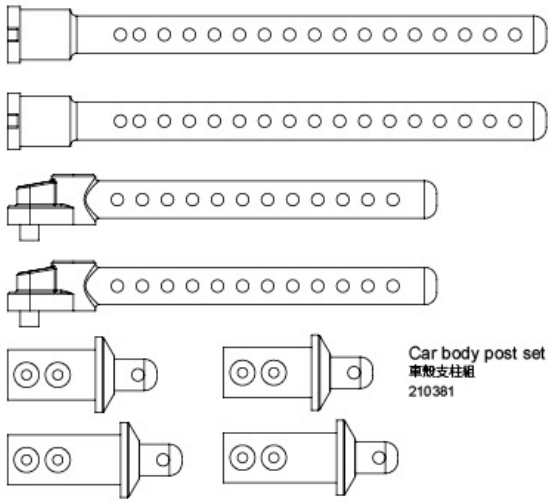

Car body post set
車殼支柱組
210381

PARTS

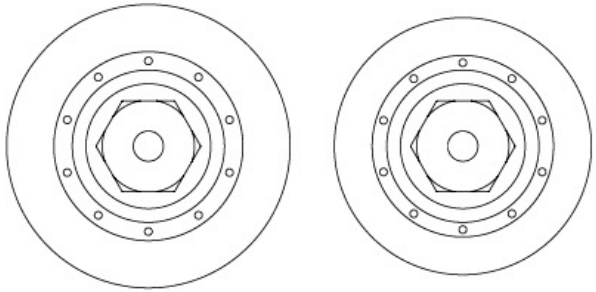

Wheel hubs w/disc shape (large) with sticker
碗型六角輪座組 (加大型) 附貼紙
230041

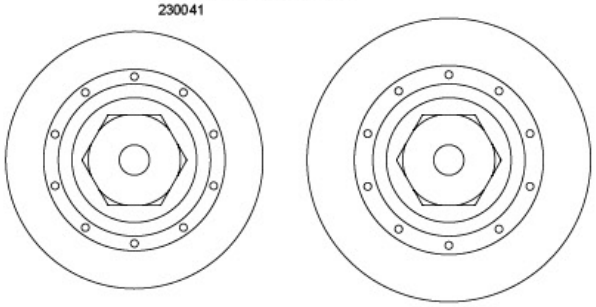

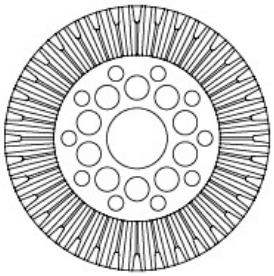

Bevel gear set 36-17T ×2
傘齒組 36-17T
210034

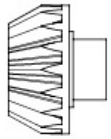

XXX Eccentric motor mount set
XXX 偏心式馬達座組
210098



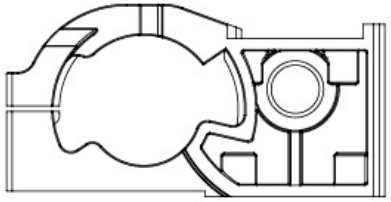





Realistic wheel & tire set
像真胎框組
103021 / 103022





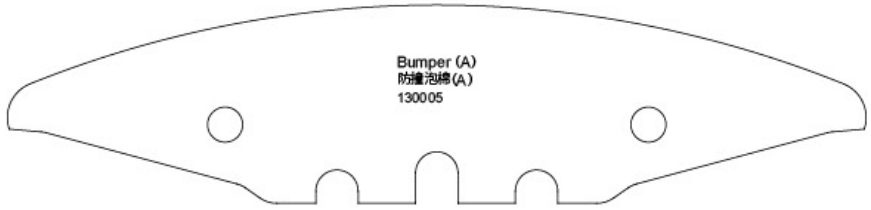

Bumper (A)
防撞泡棉(A)
130005

158 ×12 ×2.5 Sponge tape
泡棉膠
130017

20 ×80 ×1 Sponge
吸震泡棉
130034



6.5 ×2 Sponge
泡棉
130021



Antenna holder
天線管座
210038



Rail pulley spacer set (black)
滑軌滑輪墊片組(黑)
210037BK



XXX Alum. propeller shaft
XXX 鋁合金中傳軸
(210219)

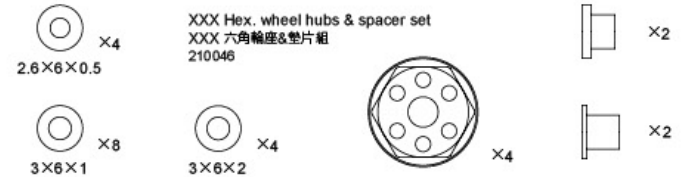

Front bumper set
前防撞板組
230146

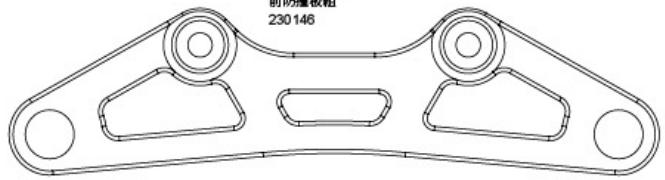

PARTS CODE

103021	Silver grey 5H wheel w/AD realistic tire (4)	110053	Cap screw M2.5×30 (2)	210034	Bevel gear set 36-17	210654	XXX-R Carbon racing lower deck 2.0
103022	Silver grey TE wheel w/AD realistic tire (4)	110054	Set screw M3×8 (10)	210037	Rail pulley spacer set	230001	XXX Front damper stay
110001	Round head screw M3×6 (10)	110055	G-clip 10.0 (10)	210038	Antenna holder	230002	XXX Rear damper stay
110002	Round head screw M3×8 (10)	110056	Set screw M3×12 (6)	210039	Gear box cover set	230041	Wheel hubs w/disc shape (large)
110004	Round head screw M2×4 (6)	110060	Set screw M3×2.6 (10)	210040	Joint set	230119	F & R Wheel hubs (fit for the brake sisc)
110005	Countersunk screw M3×8 (10)	110073	Countersunk screw M3×16 (6)	210041	Bevel gear box set	230146	Front bumper set
110007	Set screw M3×6 (6)	110075	Tapping flat head screw 3×7 (10)	210042	Gear holder steering rail set	310001	Ball connector 4.8×4.5 (5)
110008	Set screw M3×25 (6)	110094	Tapping round head screw 3×10 (10)	210045	F & R lower arms	310008	Piston rod (4)
110009	Set screw M3×20 (6)	110099	Countersunk screw M3×4 (10)	210048	Suspension mount set	310029	Rail post (2)
110013	E-clip 2.0 (10)	120001	Ball bearing 10×15 (4)	210049	F & R Wheel hubs	310030	Bevel gear - long arbor
110015	Flange nut M4 (4)	120002	Ball bearing 5×10 (4)	210050	6 Deg. C hubs	310032	Diff. screw & spring set
110016	R-clip 6.0 (10)	120006	Ball bearing 3×7 (2)	210057	Damper cap set	310033	Diff. plate (2)
110017	Shaft 2×9.8 (10)	120007	Ball bearing 8×14 (2)	210071	Damper cylinder (2)	310035	Lower arm shaft 2.6×22&25 (each one pair)
110020	Steel ball 3.0 (13)	120017	Bearing 5×8 (4)	210095	XXX Adjuster & servo mount set	310037	Ball connector 4.8×9 (2)
110024	Countersunk screw M3×6 (10)	130004	Oil seal (4)	210096	Spur gear 48P-74T	310065	Wheel axle (2)
110026	Round head screw M3×10 (10)	130005	Bumper (A)	210098	XXX Eccentric motor mount set	310106R	Spring retainer (red) (2)
110029	Round head screw M3×12 (6)	130017	Inner sponge (8)	210100	XXX Upper deck & battery strap	820014	Spacer 3×5×0.3 (8)
110032	Set screw M3×10 (6)	130019	Battery O-ring (L)	210161	Ball connector nut 4.8 (4)	820020	Spacer 5×7×0.3 (8)
110035	Set screw M3×3 (6)	130021	Sponge 6.5×2 (10)	210219	XXX Alum. propeller shaft (red)	820030	Cross joint (2)
110039	Cap screw M1.6×4 (10)	130028	Damper O-ring P3 (blue) (10)	210235	Piston spacer set	820042	Universal servo saver set
110041	Countersunk screw M3×5 (10)	130032	Damper cap O-ring (10)	210304	Steel CVD universal shaft 40 (40°) (2)	820079	Damper plastic maintenance set (2)
110042	Countersunk screw M2×6 (6)	130034	Sponge 20×80×1 (4)	210344	Ball connector nut L 4.8 (4)	820126	NS High-torque servo saver
110045	Round head screw M2×8 (partial thread) (6)	130049	O-ring 12×1 (4)	210361	Carbon bumper support 2.5	820024	Spacer 10×12×0.3 (8)
110047	Spacer 3×6×0.5 (8)	210027	Bevel diff dust cover	210396	XXX Alum. integrated shaft joint	210266-3	Coil spring 25mm (soft) (red) (2)
110051	Flat head screw M3×5 (5)	210029	Body post extension mount 4mm	210510	Enlarged brake calipers (4)	210266-4	Coil spring 25mm (super soft) (white) (2)

部品編號

103021	AD像真胎+5H框 (4)	110053	六角有頭螺絲 M2.5×30 (半牙) (2)	210034	傘齒組 36-17	210654	XXX-R 競速纖維底盤2.0
103022	AD像真胎+TE框 (4)	110054	六角止付螺絲 M3×8 (10)	210037	滑軌滑輪墊片組	230001	XXX 前避震架
110001	六角半圓頭螺絲 M3×6 (10)	110055	G扣 10.0 (10)	210038	天線座	230002	XXX 後避震架
110002	六角半圓頭螺絲 M3×8 (10)	110056	六角止付螺絲 M3×12 (6)	210039	齒箱上蓋組	230041	碟型六角輪座組 (加大型)
110004	六角半圓頭螺絲 M2×4 (6)	110060	六角止付螺絲 M3×2.6 (10)	210040	接杯組	230119	前後輪座組 (可裝煞車碟)
110005	六角沉頭螺絲 M3×8 (10)	110073	六角沉頭螺絲 M3×16 (6)	210041	傘齒座組	230146	前防撞板組
110007	六角止付螺絲 M3×6 (6)	110075	自攻六角沉頭螺絲 3×7 (10)	210042	齒座搖臂滑軌組	310001	內六角公球頭 4.8×4.5 (5)
110008	六角止付螺絲 M3×25 (6)	110094	自攻六角半圓頭螺絲 3×10 (10)	210045	前後下擺臂組	310008	避震軸心 (4)
110009	六角止付螺絲 M3×20 (6)	110099	六角沉頭螺絲 M3×4 (10)	210048	下擺臂座組	310029	滑軌支柱 (2)
110013	E扣 2.0 (10)	120001	培林 10×15 (4)	210049	前後輪座組	310030	傘齒長軸
110015	凸緣螺帽 M4 (4)	120002	培林 5×10 (4)	210050	6度C座組	310032	滾差彈簧螺絲組
110016	R銷 6.0 (10)	120006	培林 3×7 (2)	210057	避震器上下蓋組	310033	滾差壓板 (2)
110017	插銷 2×9.8 (10)	120007	培林 8×14 (2)	210071	避震器筒身 (2)	310035	下擺臂插銷 2.6×22&25 (各一對)
110020	差速鋼珠 3.0 (13)	120017	軸承 5×8 (4)	210095	XXX 拉桿 & 伺服機座	310037	內六角公球頭 4.8×9 (2)
110024	六角沉頭螺絲 M3×6 (10)	130004	避震氣室 (4)	210096	大齒盤 48P-74T	310065	萬向接杯 (2)
110026	六角半圓頭螺絲 M3×10 (10)	130005	防撞泡棉 (A)	210098	XXX 偏心式馬達座組	310106R	避震調整環 (紅) (2)
110029	六角半圓頭螺絲 M3×12 (6)	130017	吸震泡棉 (8)	210100	XXX 二樓板 & 電池壓板組	820014	墊片 3×5×0.3 (8)
110032	六角止付螺絲 M3×10 (6)	130019	電池O環 (L)	210161	球頭螺帽 4.8 (4)	820020	墊片 5×7×0.3 (8)
110035	六角止付螺絲 M3×3 (6)	130021	泡棉 6.5×2 (10)	210219	XXX 鋁合金中傳軸 (紅)	820030	連接軸 (2)
110039	六角有頭螺絲 M1.6×4 (10)	130028	阻尼器O環 P3 (藍) (10)	210235	避震器活塞墊片組	820042	通用型伺服緩衝組
110041	六角沉頭螺絲 M3×5 (10)	130032	避震上蓋O環 (10)	210304	鋼製CVD傳動軸 40 (40°) (2)	820079	避震膠件包 (2)
110042	六角沉頭螺絲 M2×6 (6)	130034	吸震泡棉 20×80×1 (4)	210344	球頭螺帽L 4.8 (4)	820126	NS 高扭力伺服緩衝器
110045	六角半圓頭螺絲 M2×8 (半牙) (6)	130049	O環 12×1 (4)	210361	碳纖維泡棉壓板 2.5	820024	墊片 10×12×0.3 (8)
110047	墊片 3×6×0.5 (8)	210027	傘差防塵殼	210396	XXX 鋁合金一體式接杯	210266-3	避震彈簧 25mm (軟) (紅) (2)
110051	十字扁頭螺絲 M3×5 (5)	210029	車殼柱延伸座 4mm	210510	加大煞車卡鉗 (4)	210266-4	避震彈簧 25mm (超軟) (白) (2)

026258